[CONTENTS]

❍ **SECTION 1. GENERAL**

- SERVICING PRECAUTIONS 1-2
- ESD PRECAUTIONS 1-4
- SPECIFICATION 1-5

❍ **SECTION 2. TROUBLESHOOTING**

- ADJUSTMENTS 2-1
- TROUBLESHOOTING 2-2
- WAVEFORMS OF MAJOR CHECK POINT 2-6
- BLOCK DIAGRAM 2-15
- SCHEMATIC DIAGRAMS 2-17
- WIREING DIAGRAM 2-23
- PRINTED CIRCUIT DIAGRAMS 2-25
- INTERNAL BLOCK DIAGRAM OF ICs 2-33

❍ **SECTION 3. EXPLODED VIEWS**

- CABINET AND MAIN FRAME SECTION 3-1

❍ **SECTION 4. SPEAKER PART**

- SPEAKER PART 4-1

❍ **SECTION 5. REPLACEMENT PARTS LIST**

- REPLACEMENT PARTS LIST 5-1

SECTION 1. GENERAL

❏ SERVICING PRECAUTIONS

NOTES REGARDING HANDLING OF THE PICK-UP

1. Notes for transport and storage

1) The pick-up should always be left in its conductive bag until immediately prior to use.
2) The pick-up should never be subjected to external pressure or impact.

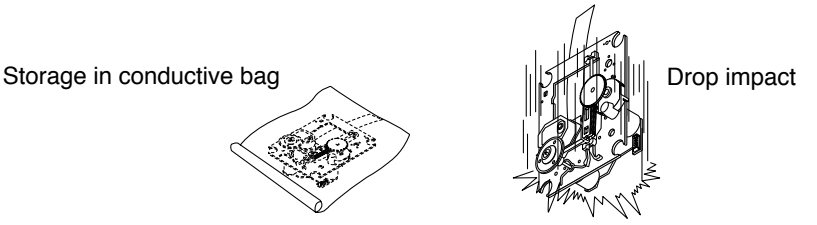

2. Repair notes

1) The pick-up incorporates a strong magnet, and so should never be brought close to magnetic materials.
2) The pick-up should always be handled correctly and carefully, taking care to avoid external pressure and impact. If it is subjected to strong pressure or impact, the result may be an operational malfunction and/or damage to the printed-circuit board.
3) Each and every pick-up is already individually adjusted to a high degree of precision, and for that reason the adjustment point and installation screws should absolutely never be touched.
4) Laser beams may damage the eyes!
   Absolutely never permit laser beams to enter the eyes!
   Also NEVER switch ON the power to the laser output part (lens, etc.) of the pick-up if it is damaged.

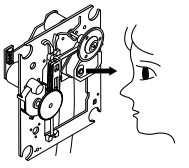

NEVER look directly at the laser beam, and don't let contact fingers or other exposed skin.

5) Cleaning the lens surface
   If there is dust on the lens surface, the dust should be cleaned away by using an air bush (such as used for camera lens). The lens is held by a delicate spring. When cleaning the lens surface, therefore, a cotton swab should be used, taking care not to distort this.

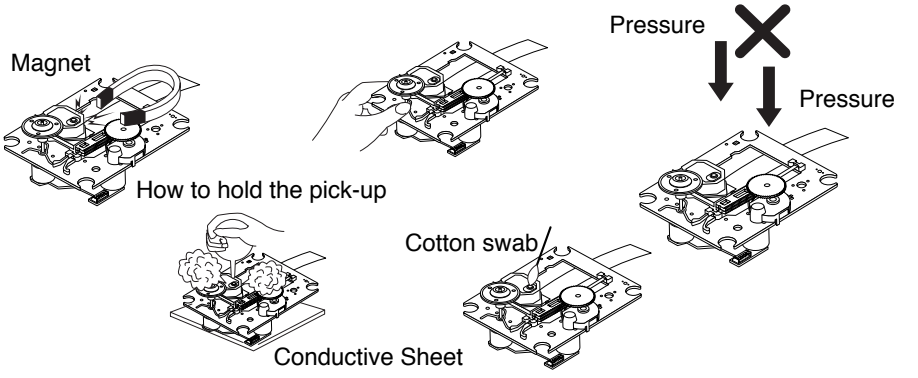

6) Never attempt to disassemble the pick-up.
   Spring by excess pressure. If the lens is extremely dirty, apply isopropyl alcohol to the cotton swab. (Do not use any other liquid cleaners, because they will damage the lens.) Take care not to use too much of this alcohol on the swab, and do not allow the alcohol to get inside the pick-up.

NOTES REGARDING COMPACT DISC PLAYER REPAIRS

1. Preparations

1) Compact disc players incorporate a great many ICs as well as the pick-up (laser diode). These components are sensitive to, and easily affected by, static electricity. If such static electricity is high voltage, components can be damaged, and for that reason components should be handled with care.
2) The pick-up is composed of many optical components and other high-precision components. Care must be taken, therefore, to avoid repair or storage where the temperature of humidity is high, where strong magnetism is present, or where there is excessive dust.

2. Notes for repair

1) Before replacing a component part, first disconnect the power supply lead wire from the unit
2) All equipment, measuring instruments and tools must be grounded.
3) The workbench should be covered with a conductive sheet and grounded.
   When removing the laser pick-up from its conductive bag, do not place the pick-up on the bag. (This is because there is the possibility of damage by static electricity.)
4) To prevent AC leakage, the metal part of the soldering iron should be grounded.
5) Workers should be grounded by an armband (1MΩ)
6) Care should be taken not to permit the laser pick-up to come in contact with clothing, in order to prevent static electricity changes in the clothing to escape from the armband.
7) The laser beam from the pick-up should NEVER be directly facing the eyes or bare skin.

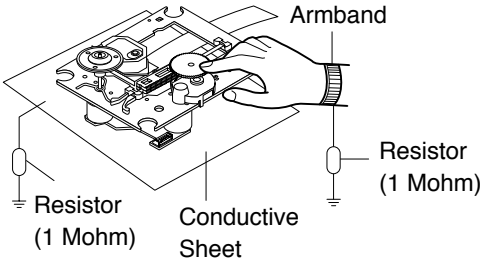

CLEARING MALFUNCTION

You can reset your unit to initial status if malfunction occur(button malfunction, display, etc.).

Using a pointed good conductor(such as driver), simply short the RESET jump wire on the inside of the volume knob for more than 3 seconds.

If you reset your unit, you must reenter all its settings(stations, clock, timer)

NOTE: 1. To operate the RESET jump wire, pull the volume rotary knob and release it.
2. If you wish to operate the RESET jump wire, it is necessary to unplug the power cord.

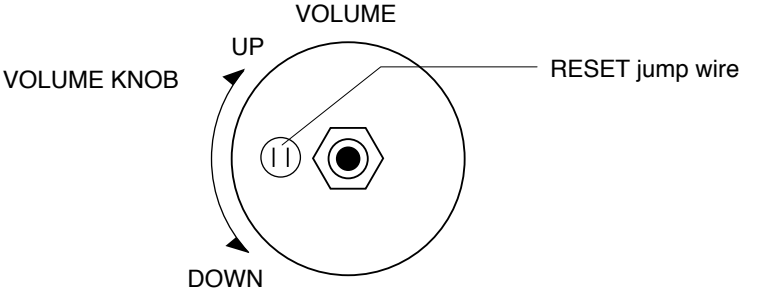

❒ ESD PRECAUTIONS

Electrostatically Sensitive Devices (ESD)

Some semiconductor (solid state) devices can be damaged easily by static electricity. Such components commonly are called Electrostatically Sensitive Devices (ESD). Examples of typical ESD devices are integrated circuits and some field-effect transistors and semiconductor chip components. The following techniques should be used to help reduce the incidence of component damage caused by static electricity.

1. Immediately before handling any semiconductor component or semiconductor-equipped assembly, drain off any electrostatic charge on your body by touching a known earth ground. Alternatively, obtain and wear a commercially available discharging wrist strap device, which should be removed for potential shock reasons prior to applying power to the unit under test.
2. After removing an electrical assembly equipped with ESD devices, place the assembly on a conductive surface such as aluminum foil, to prevent electrostatic charge buildup or exposure of the assembly.
3. Use only a grounded-tip soldering iron to solder or unsolder ESD devices.
4. Use only an anti-static solder removal device. Some solder removal devices not classified as "anti-static" can generate electrical charges sufficient to damage ESD devices.
5. Do not use freon-propelled chemicals. These can generate electrical charges sufficient to damage ESD devices.
6. Do not remove a replacement ESD device from its protective package until immediately before you are ready to install it. (Most replacement ESD devices are packaged with leads electrically shorted together by conductive foam, aluminum foil or comparable conductive materials).
7. Immediately before removing the protective material from the leads of a replacement ESD device, touch the protective material to the chassis or circuit assembly into which the device will by installed.

CAUTION : BE SURE NO POWER IS APPLIED TO THE CHASSIS OR CIRCUIT, AND OBSERVE ALL OTHER SAFETY PRECAUTIONS.

8. Minimize bodily motions when handing unpackaged replacement ESD devices. (Otherwise harmless motion such as the brushing together of your clothes fabric or the lifting of your foot from a carpeted floor can generate static electricity sufficient to damage an ESD device).

[CAUTION. GRAPHIC SYMBOLS]

	THE LIGHTNING FLASH WITH APROWHEAD SYMBOL. WITHIN AN EQUILATERAL TRIANGLE, IS INTENDED TO ALERT THE SERVICE PERSONNEL TO THE PRESENCE OF UNINSULATED “DANGEROUS VOLTAGE” THAT MAY BE OF SUFFICIENT MAGNITUDE TO CONSTITUTE A RISK OF ELECTRIC SHOCK.
	THE EXCLAMATION POINT WITHIN AN EQUILATERAL TRIANGLE IS INTENDED TO ALERT THE SERVICE PERSONNEL TO THE PRESENCE OF IMPORTANT SAFETY INFORMATION IN SERVICE LITERATURE.

❑ SPECIFICATIONS

SECTION MODEL			LX-230A
	General	Power supply	Refer to the back panel of the unit
		Power consumption	50W
		Mass	4.35kg
		Extemal dimensions(W x H x D)	161 x 255 x 268mm
	CD	Frequency Response	40 -18000Hz
		Signal-to-noise ratio	70dB
		Dynamic range	70dB
TUNER	**FM**	Tuning Range	87.5 -108.0MHz
		Intermediate Frequency	10.7 MHz
		Signal-to-noise ratio	60/55 dB
		Frequency Response	60 -10000Hz
	AM	Tuning Range	522-1611kHz or 530-1610kHz
		Intermediate Frequency	450kHz
		Signal-to-noise ratio	35 dB
		Frequency Response	100 -1800 Hz
	AMP	Output Power	18W
		T.H.D	0.15%
		Frequency Response	40-25000Hz
		Signal-to-noise ratio	80dB
	TAPE	Tape Speed	4.75cm/sec
		Wow Flutter	0.25% (MTT-111,JIS-WTD)
		F.F/REW Time	120sec(C-60)
		Frequency Response	250-8000Hz
		Signal-to-noise ratio	43dB
		Channel Separation	50dB(P/B)/45dB(R/P)
		Erase Ratio	55dB (MTT-5511)
	Speaker	**MODEL**	**LXS-230**
		Type	1 Way 1 Speaker
		Impedance	6Ω
		Frequency Response	85-20000Hz
		Sound Pressure Level	88dB/W(1m)
		Rated Input Power	20W
		Max.Input Power	40W
		Net Dimension(W x H x D)	160 x 248 x 192mm

NOTE : Specification are subject to change without notice in the course of product improvement.

MEMO

SECTION 2. ELECTRICAL SECTION

❑ ADJUSTMENTS

This set has been aligned at the factory and normally will not require further adjustment. As a result, it is not recommended that any attempt is made to modificate any circuit. If any parts are replaced or if anyone tampers with the adjustment, realignment may be necessary.

IMPORTANT

1. Check Power-source voltage.
2. Set the function switch to band being aligned.
3. Turn volume control to minimum unless otherwise noted.
4. Connect low side of signal source and output indicator to chassis ground unless otherwise specified.
5. Keep the signal input as low as possible to avoid AGC and AC action.

TAPE DECK ADJUSTMENT

1. AZIMUTH ADJUSTMENT

Deck Mode	Test Tape	Test Point	Adjustment	Adjust for
Palyback	MTT-114	Speaker Out	DECK Screw Azimuth Screw	Maximum

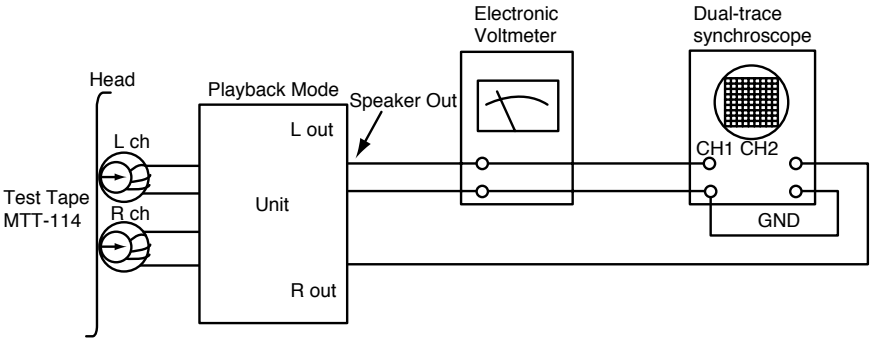

Figure 1. Azimuth Adjustment Connection Diagram

❑ TROUBLESHOOTING

• CD PART

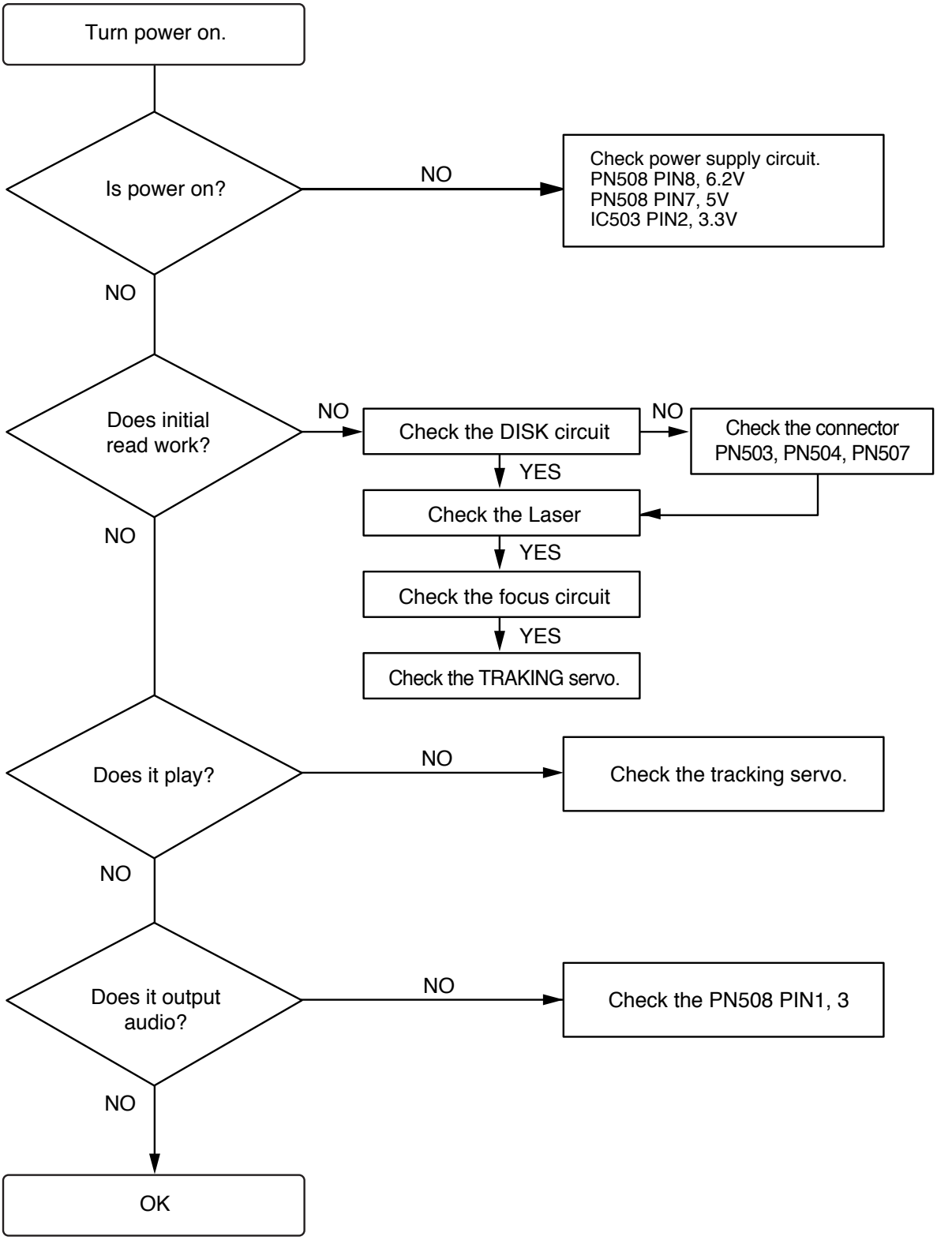

FAILS TO INITIAL READ

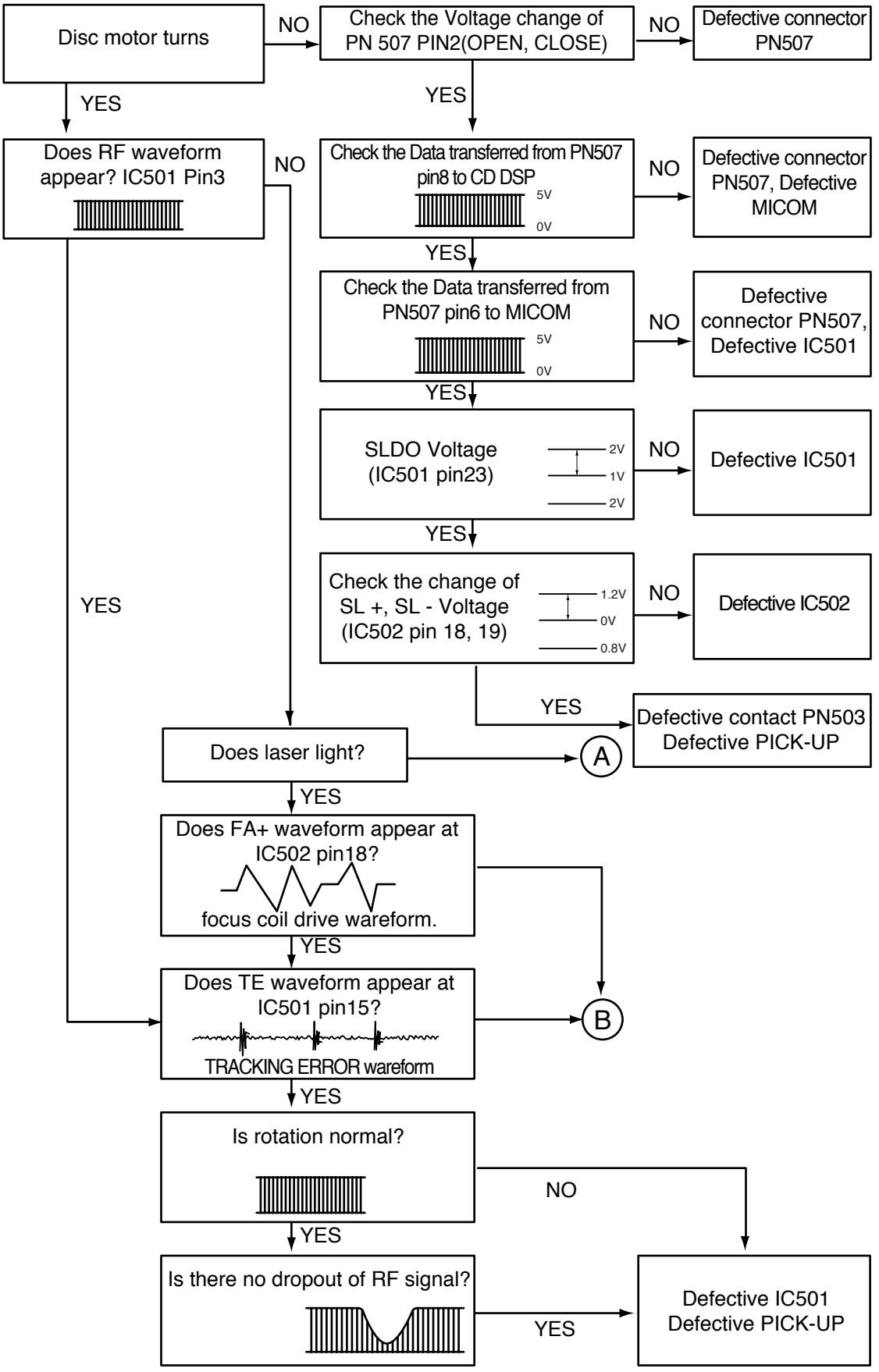

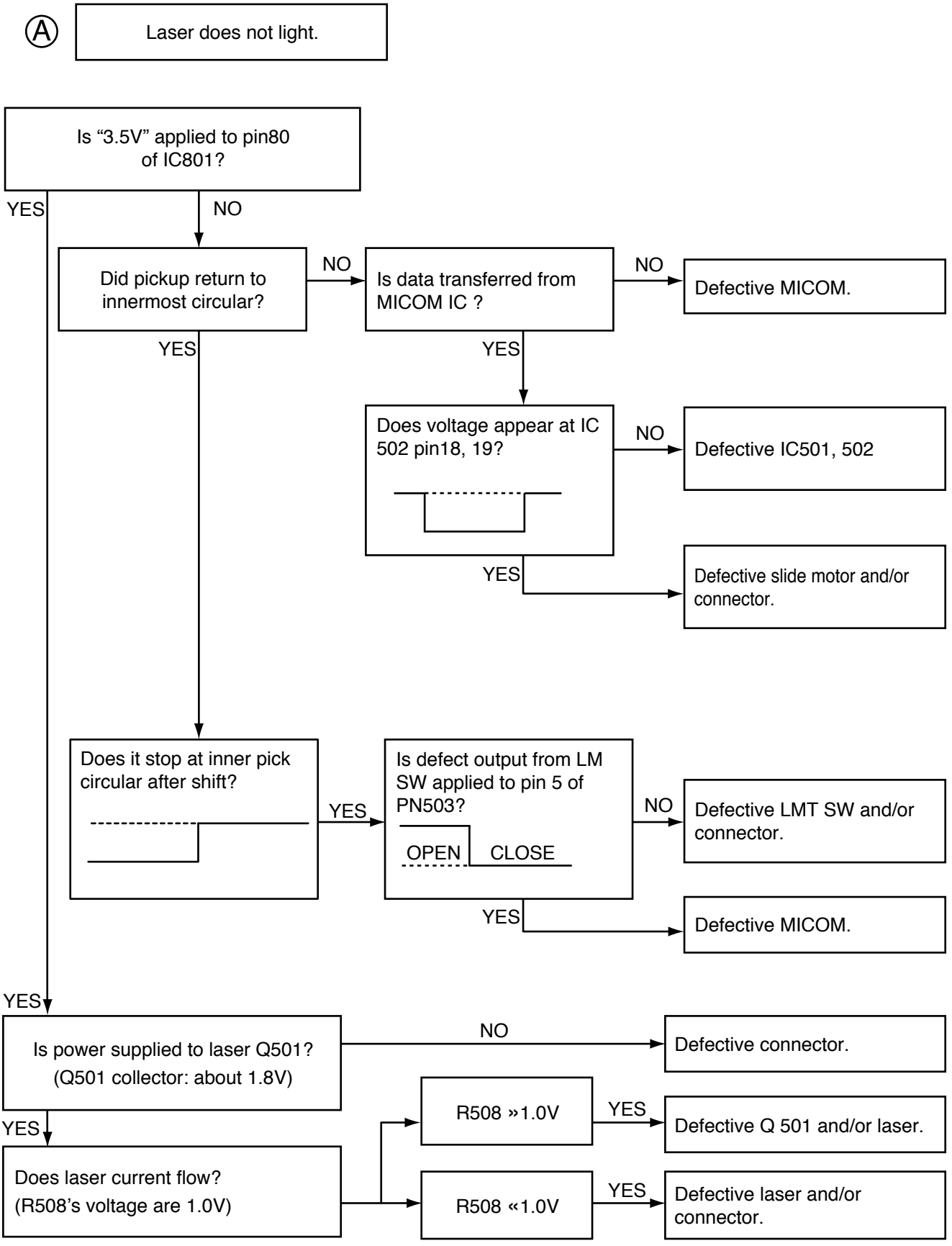
Ⓐ
Laser does not light.
Is “3.5V” applied to pin80 of IC801?
YES
NO
Did pickup return to innermost circular?
NO
Is data transferred from MICOM IC ?
NO
Defective MICOM.
YES
YES
Does voltage appear at IC 502 pin18, 19?
NO
Defective IC501, 502
YES
Defective slide motor and/or connector.
Does it stop at inner pick circular after shift?
YES
Is defect output from LM SW applied to pin 5 of PN503?
OPEN
CLOSE
NO
Defective LMT SW and/or connector.
YES
Defective MICOM.
YES
Is power supplied to laser Q501? (Q501 collector: about 1.8V)
NO
Defective connector.
YES
Does laser current flow? (R508’s voltage are 1.0V)
R508 »1.0V
YES
Defective Q 501 and/or laser.
R508 «1.0V
YES
Defective laser and/or connector.

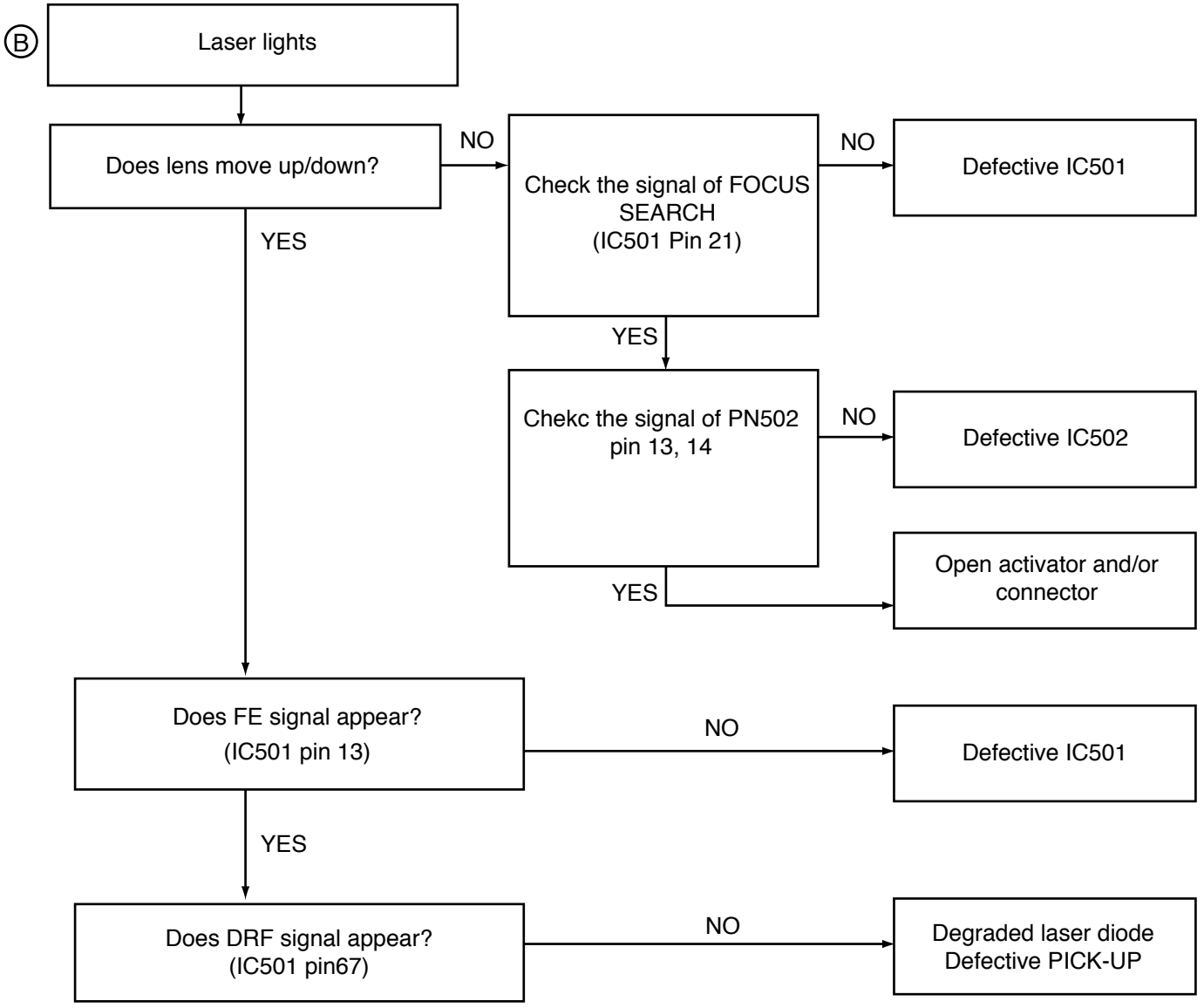
B
Laser lights
Does lens move up/down?
NO
Check the signal of FOCUS SEARCH (IC501 Pin 21)
NO
Defective IC501
YES
YES
Chekc the signal of PN502 pin 13, 14
NO
Defective IC502
YES
Open activator and/or connector
Does FE signal appear? (IC501 pin 13)
NO
Defective IC501
YES
Does DRF signal appear? (IC501 pin67)
NO
Degraded laser diode
Defective PICK-UP

❑ WAVEFORMS OF MAJOR CHECK POINT

1. HF signal (RF signal) waveform
   (IC501 pin4) during normal play

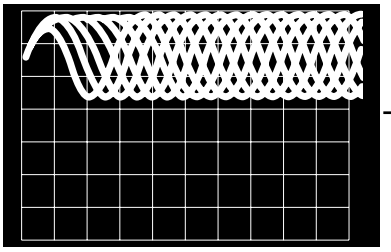

0.5V/Div.
500nS/Div.
OV

2. EFM signal (IC501 pin 3)waveform
   during Normal Play

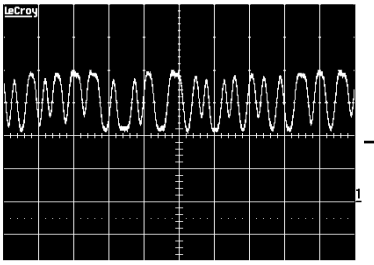

0.5V/Div.
5μS/Div.
OV

3. Focus coil drive waveform(IC502 pin13)
   • When focus search failed or there is no disc on the tray

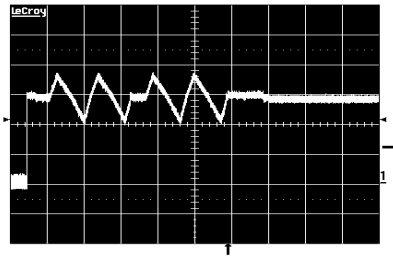

1S/Div.
1V/Div.
OV

• Focus coil drive waveform(FDO: IC501 pin21) and
  DRF(IC501 pin67) when focus search is accomplished

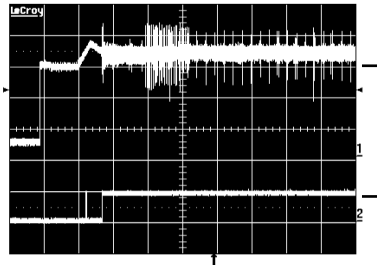

OV
(CH1)
OV
(CH2)

CH1 : FOCUS COIL DRIVE
SIGNAL 2V/Div.
CH2 : DRF

4. Tracking coil drive waveform and TE during track
   traverse
   (1) When time division is 20mS/Div.1V/Div.

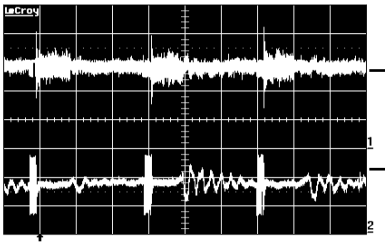

OV
(CH1)
OV
(CH2)

CH1 : TRACKING COIL DRIVE (IC502 pin27)
CH2 : TRACKING ERROR (TE: IC501 pin15)

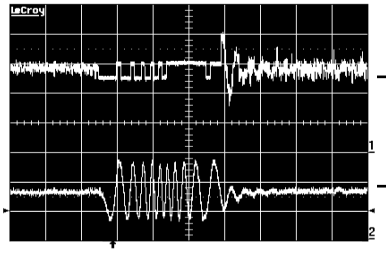

OV
(CH1)
OV
(CH2)

CH1 : TRACKING COIL DRIVE (IC502 pin27)
SIGNAL 2V/Div.
CH2 : TRACKING ERROR (TE: IC501 pin15)
1V/Div.

(3) When time division is 0.5nS/div.
   (During backward Track Traverse)

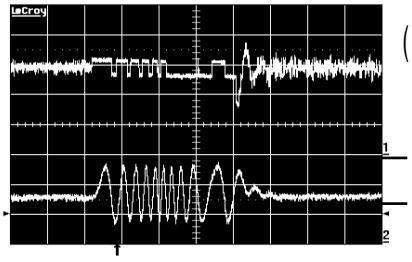

1mS/Div.
1V/Div.
OV
OV
(CH2)

CH1 : TRACKING COIL DRIVE
SIGNAL 2V/Div. (IC502 pin27)
CH2 : TRACKING ERROR(TE: IC501 pin15)
1V/Div.

5. Feed motor drive waveform(IC 502 pin18)
   During normal play

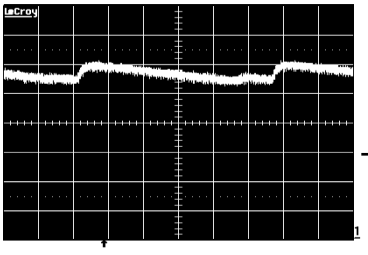

2S/Div.
0.5V/Div.
OV

❑ AUDIO PART

P-SENS PART

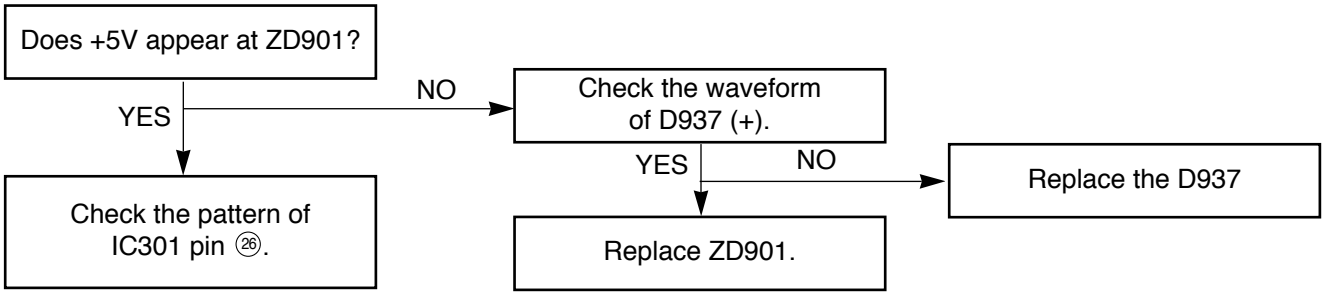

VKK PART

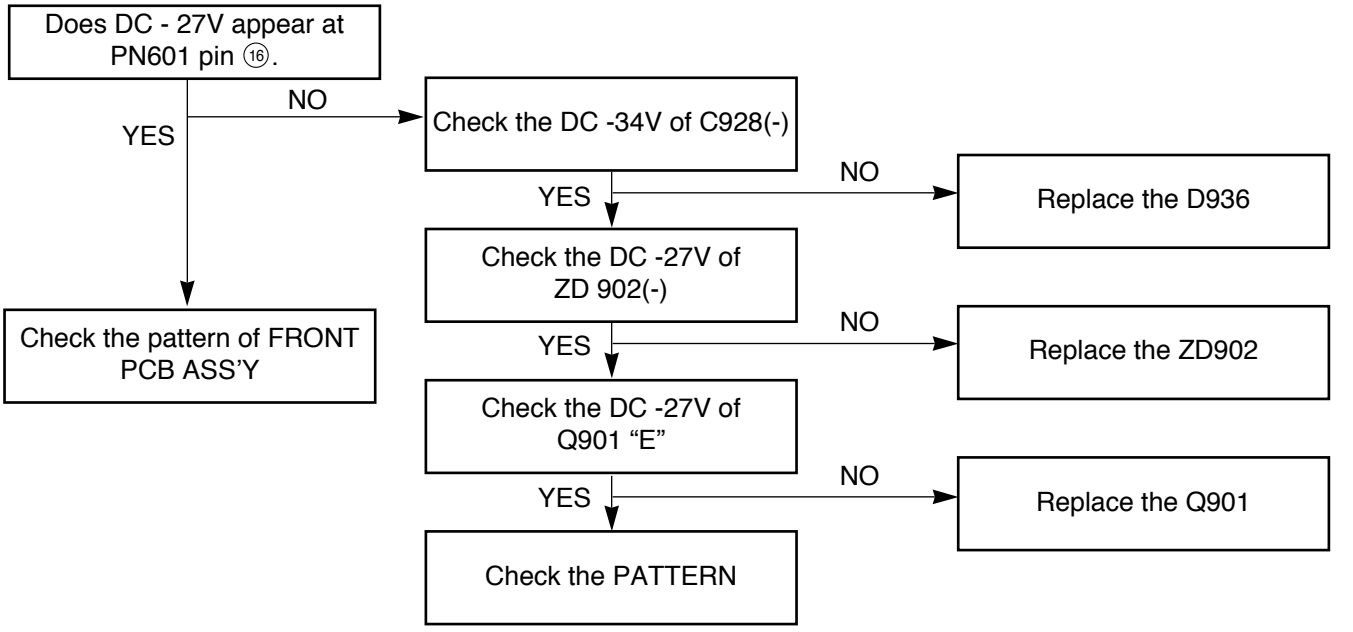

POWER CIRCUIT

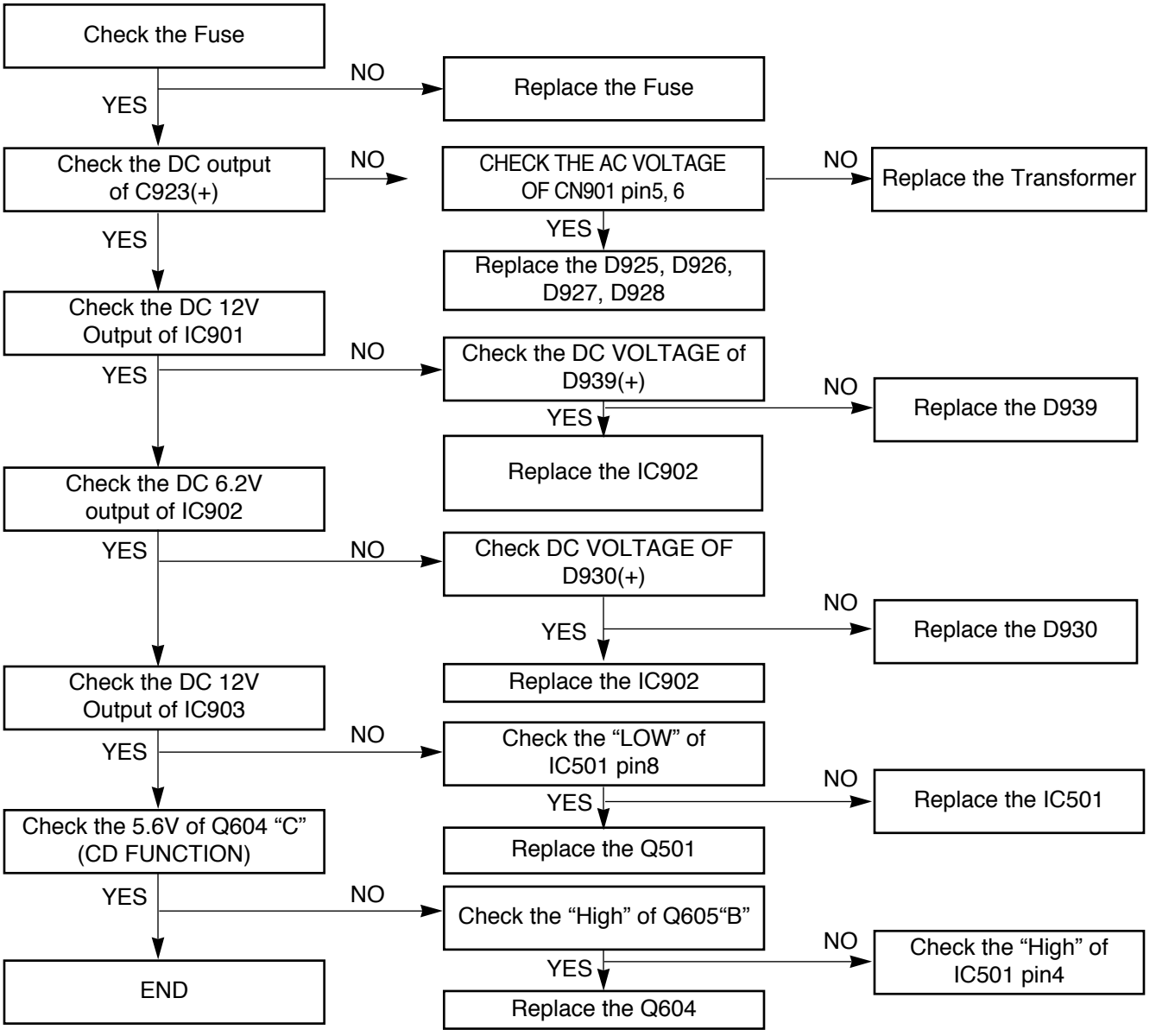

MUTING CIRCUIT (MUTE)

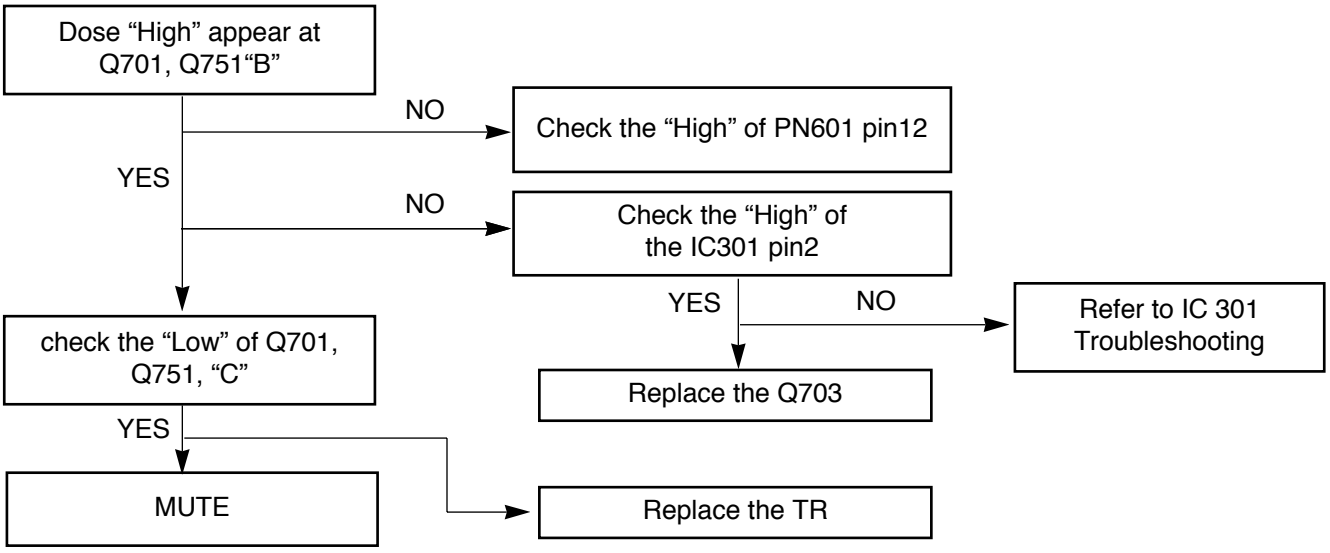

AUDIO ABNORMAL

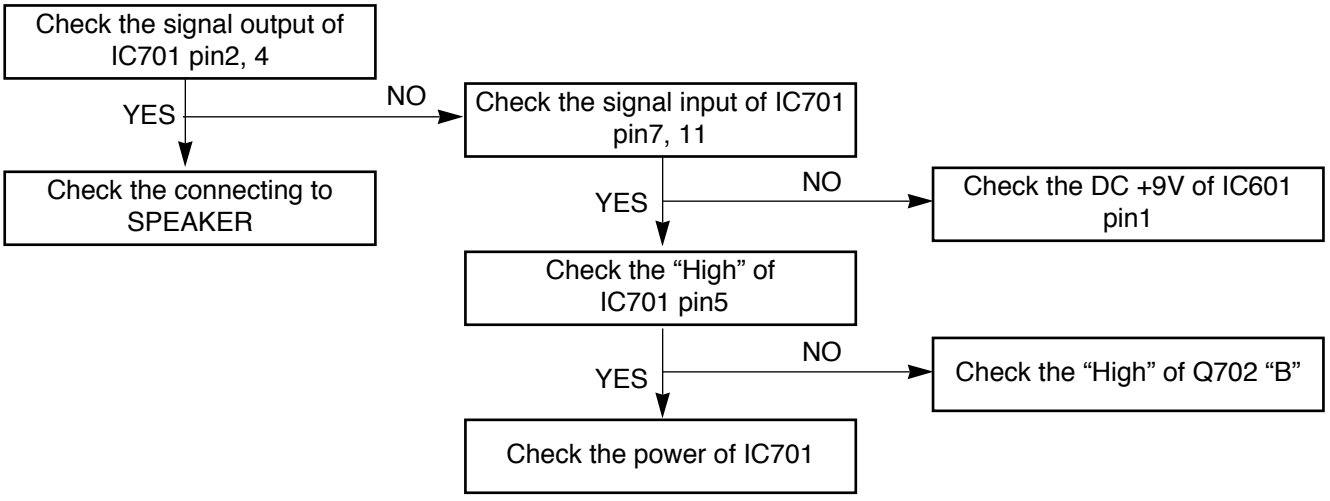

FUNCTION MODE AUDIO ABNORMAL

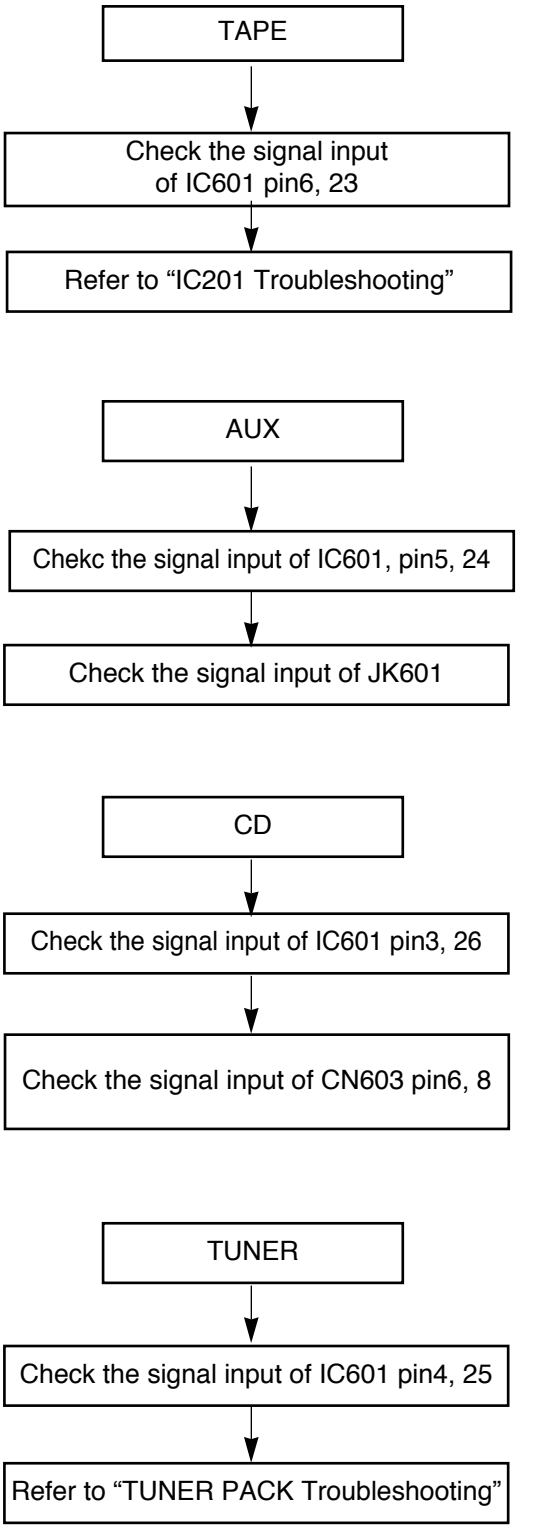

IC301 TROUBLESHOOTING

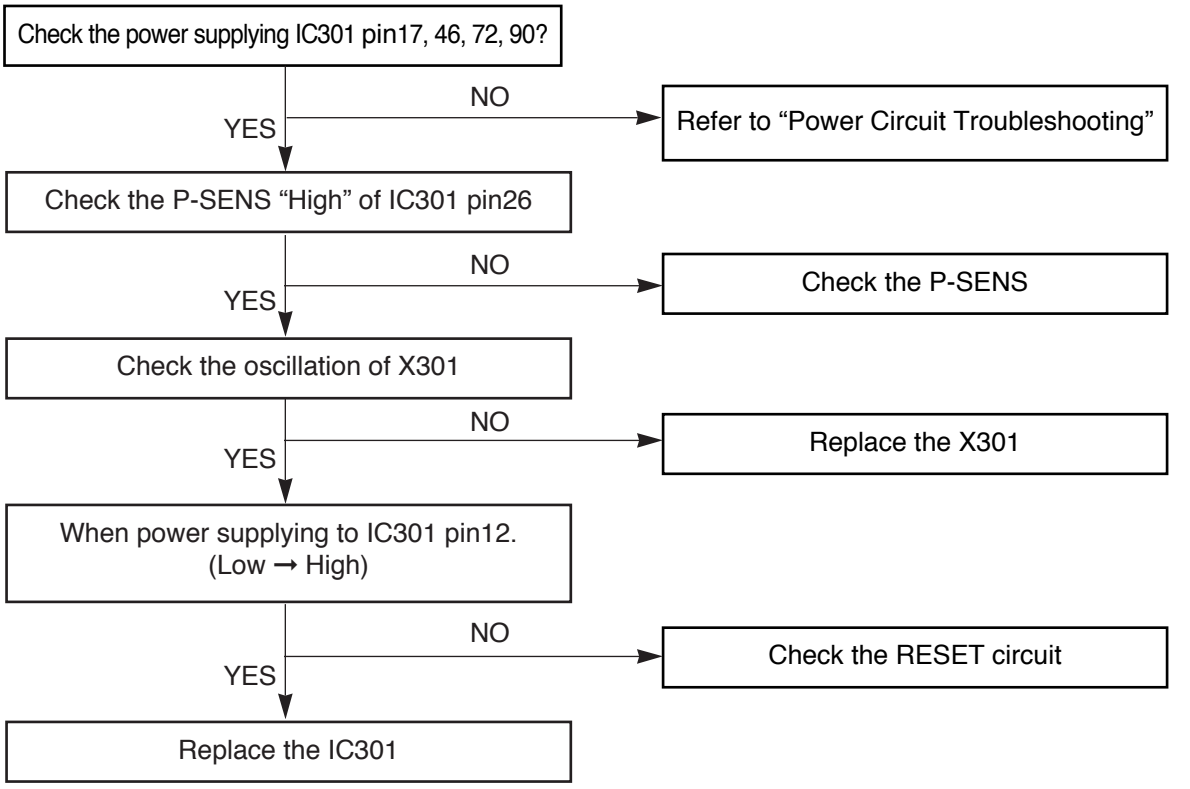

IC601 TROUBLESHOOTING

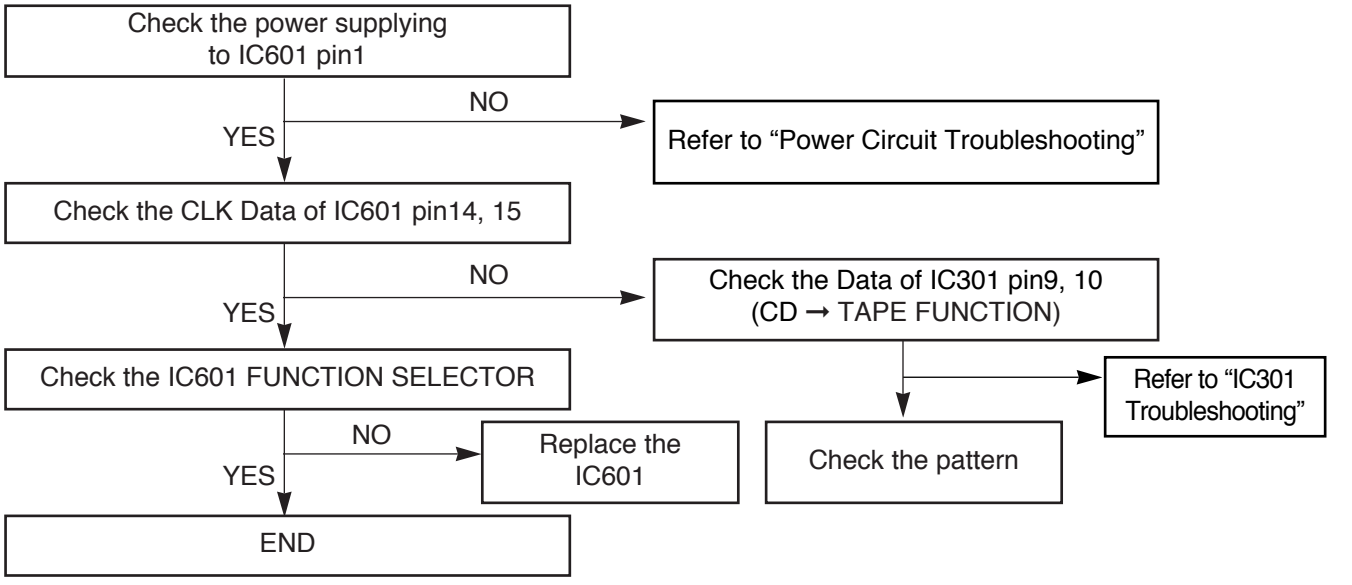

TUNER PACK TROUBLESHOOTING

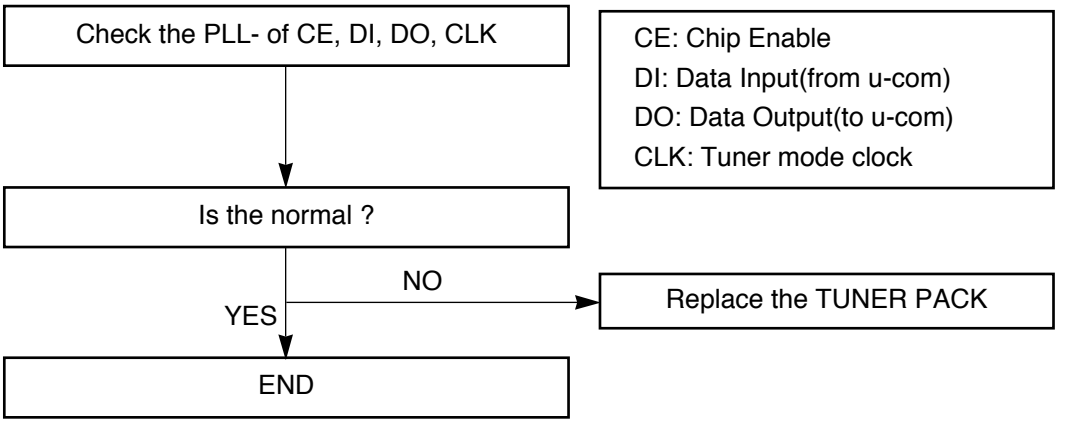

TUNER PACK POWER TROUBLESHOOTING

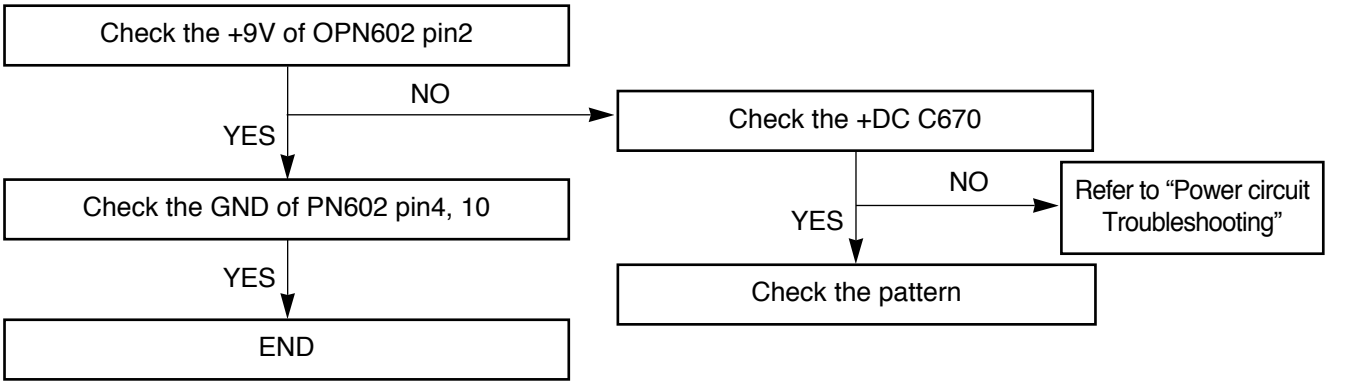

PLAY

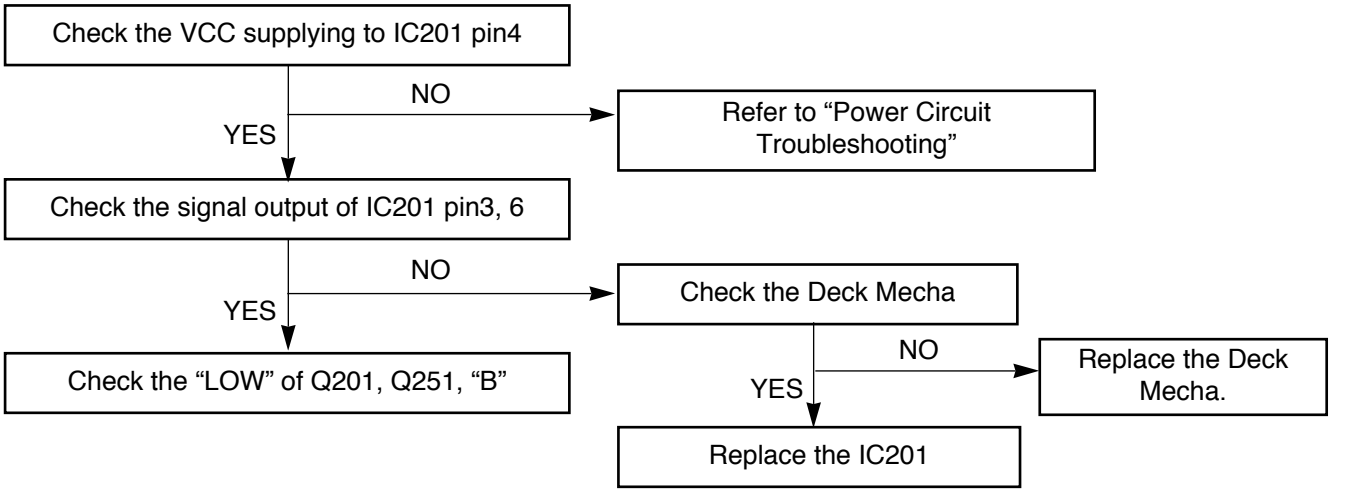

REC (Q252, Q202 ON / R273, R223 HIGH)

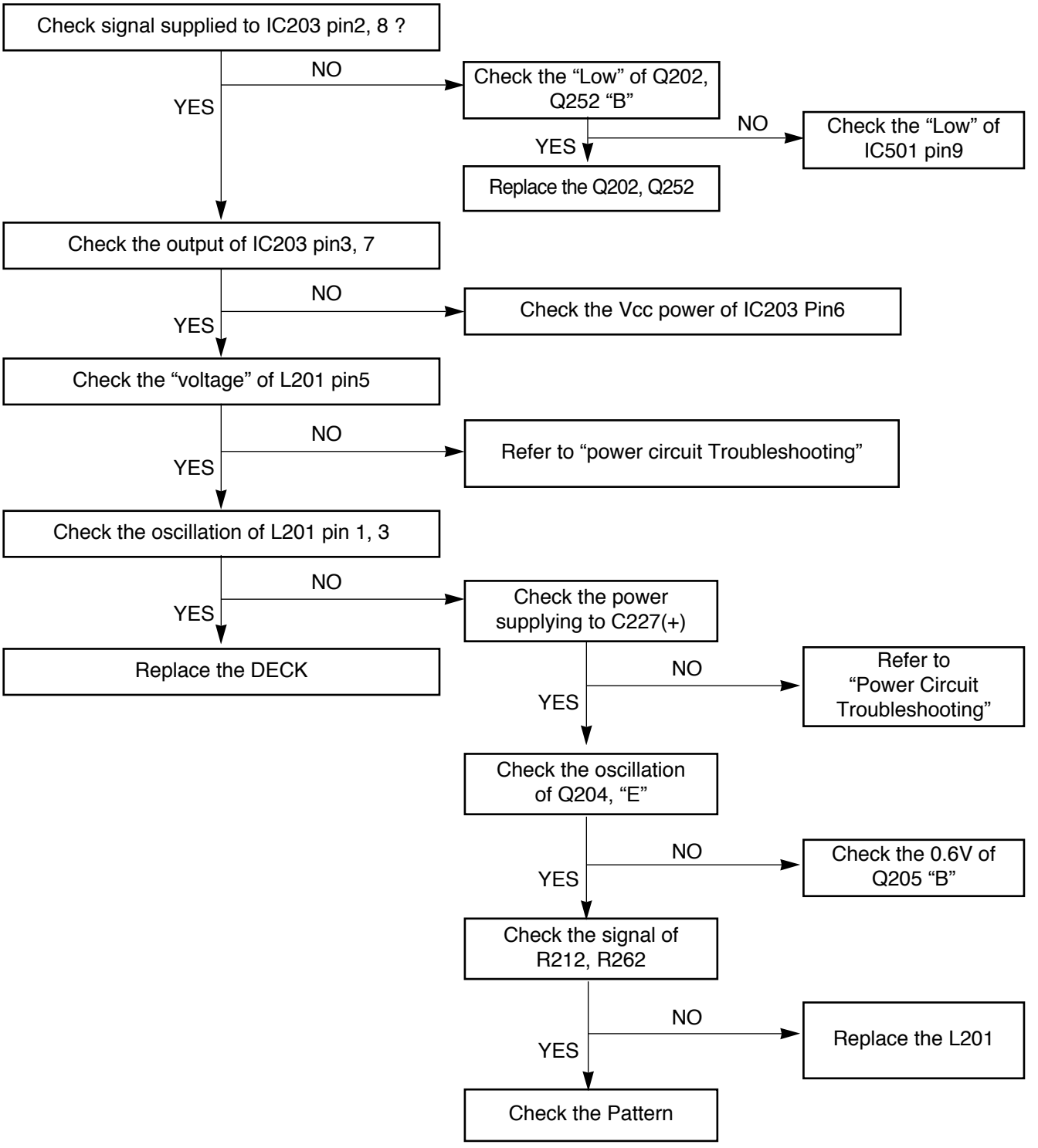

MEMO

BLOCK DIAGRAM

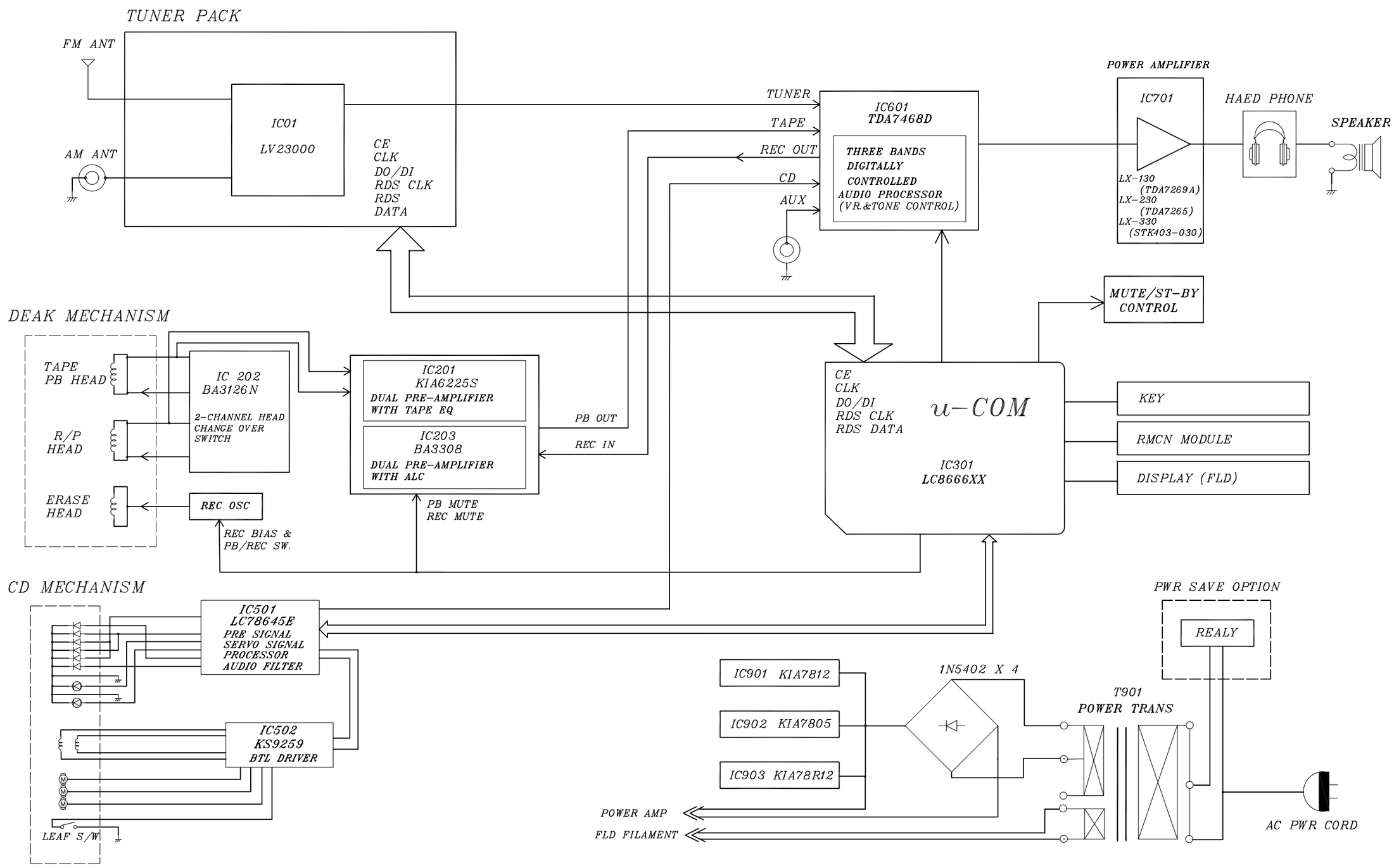

SCHEMATIC DIAGRAMS

• MAIN SCHEMATIC DIAGRAM

NOTE: Warning
Parts that are shaded are critical With respect to risk of fire or electrical shock.

NOTE:
1. Shaded(■) parts are critical for safety.Replace only with specified part number.
2. Voltages are DC-measured with a digital voltmefer during Play mode.

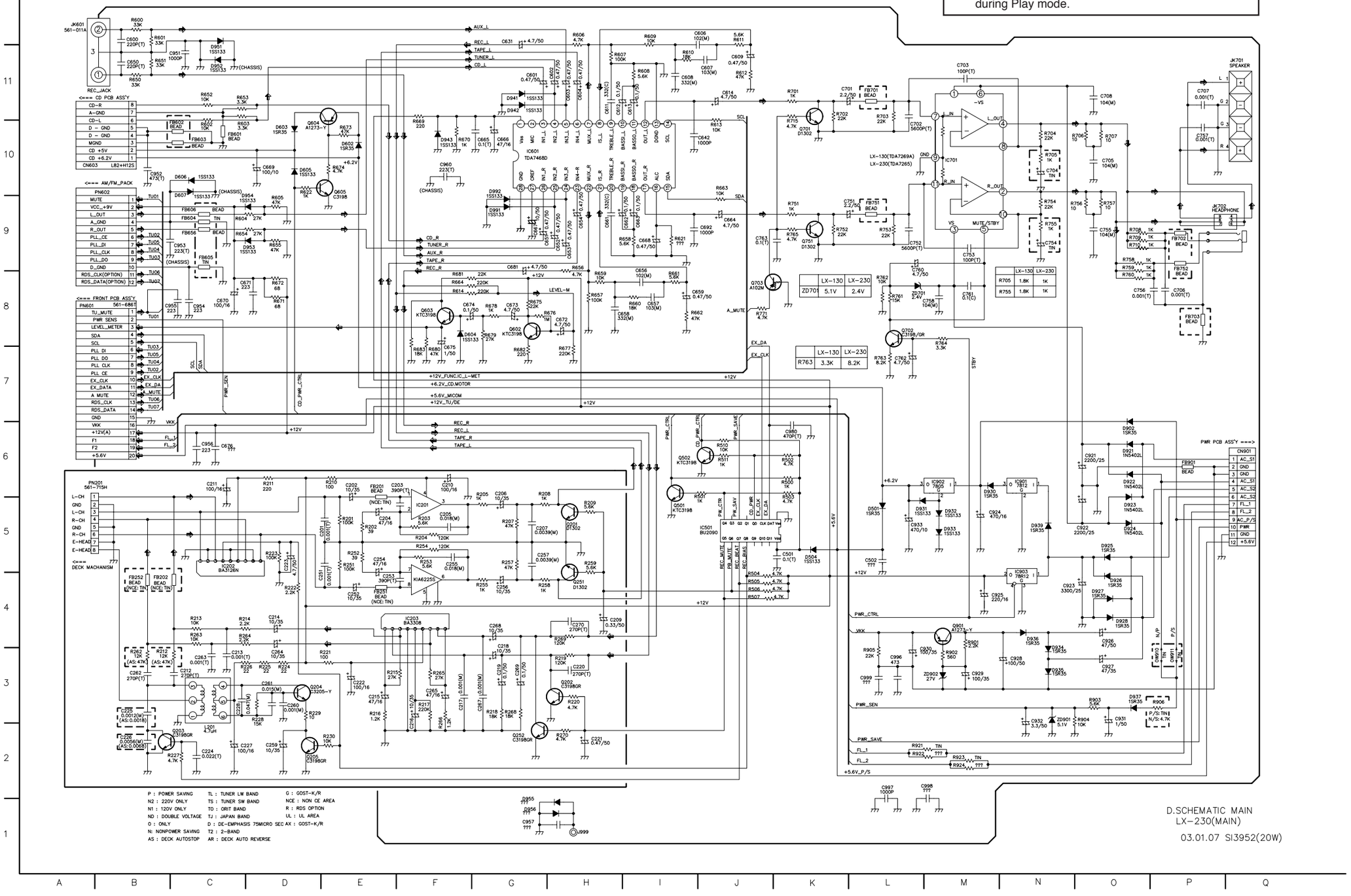

P : POWER SAVING
N2 : 220V ONLY
N1 : 120V ONLY
ND : DOUBLE VOLTAGE
O : ONLY
N: NONPOWER SAVING
AS : DECK AUTOSTOP
TL : TUNER LW BAND
TS : TUNER SW BAND
TO : ORIT BAND
TJ : JAPAN BAND
D : DE-EMPHASIS 75MICRO SEC
T2 : 2-BAND
AR : DECK AUTO REVERSE
G : GOST-K/R
NCE : NON CE AREA
R : RDS OPTION
UL : UL AREA
AX : GOST-K/R

FRONT/POWER SCHEMATIC DIAGRAM

NOTE: Warning
Parts that are shaded are critical With respect to risk of fire or electrical shock.

NOTE:
1. Shaded(■) parts are critical for safety.Replace only with specified part number.
2. Voltages are DC-measured with a digital voltmefer during Play mode.

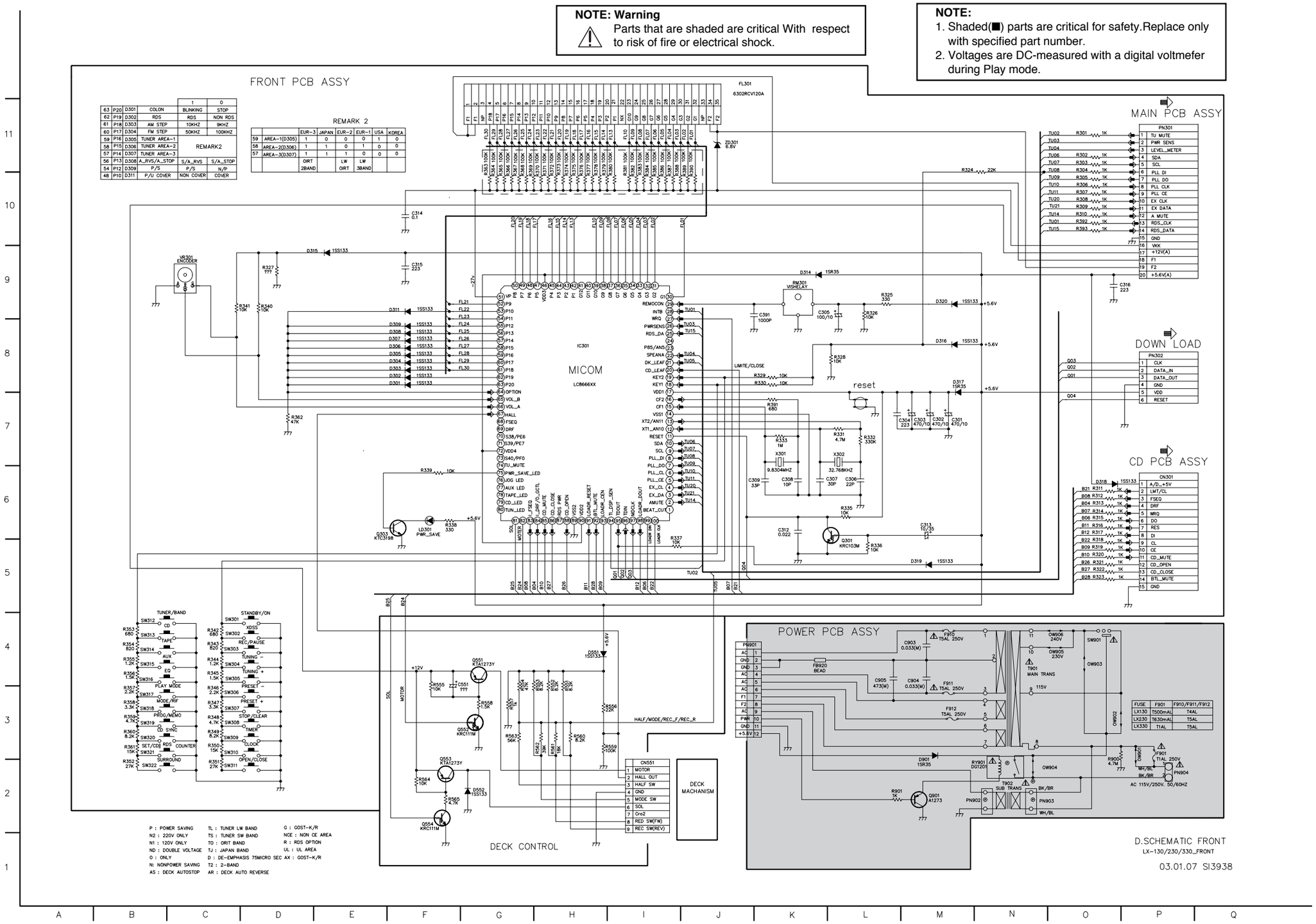

• CDP SCHEMATIC DIAGRAM

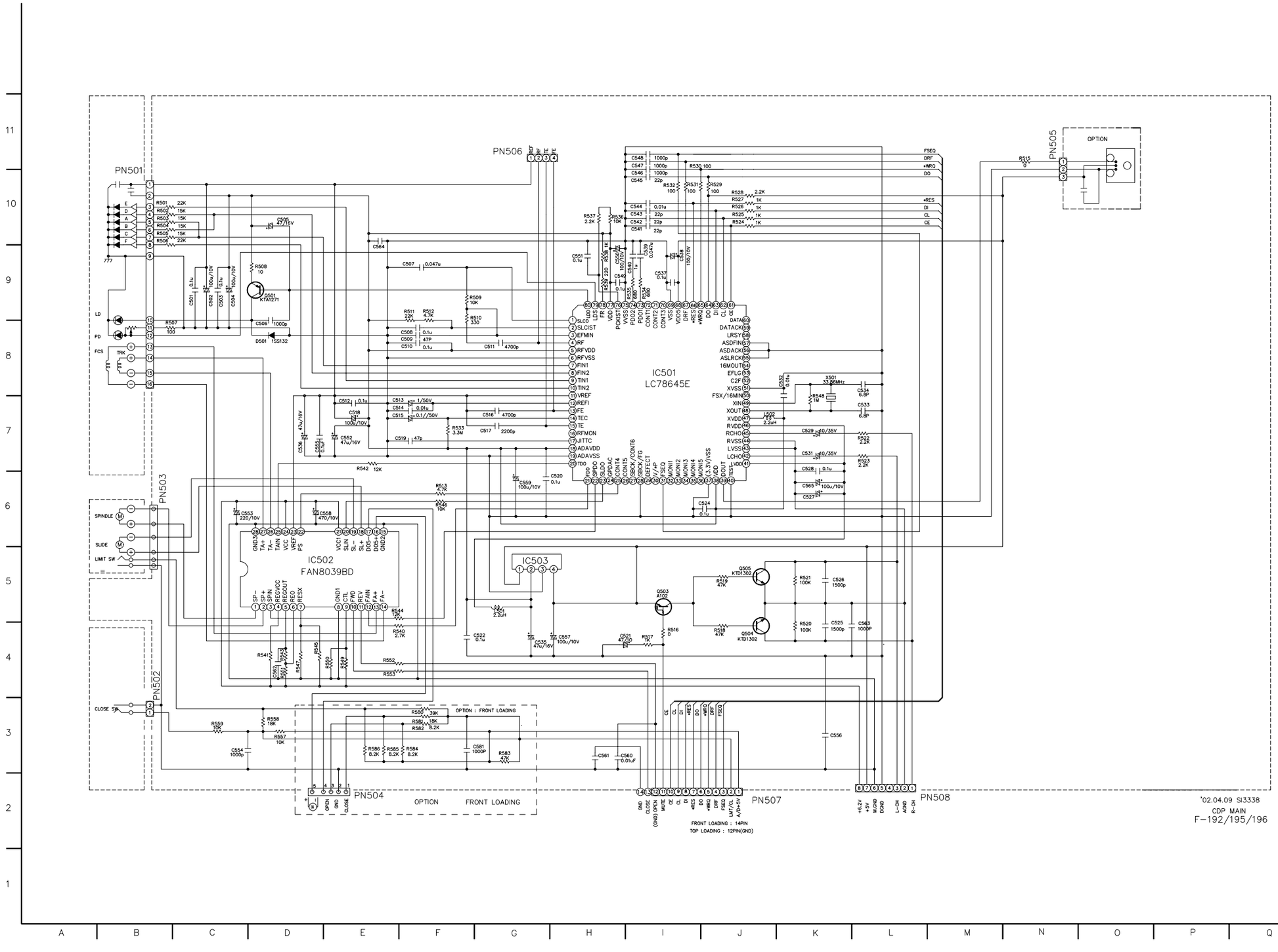

LOCATION GUIDE

•RES	L10	R520	K4
•RES	I3	R521	K5
•WRQ	L11	R522	L7
•WRQ	J3	R523	L7
C501	C9	R524	J10
C502	C9	R525	J10
C503	C9	R526	J10
C504	C9	R527	J10
C505	D10	R528	J10
C506	D8	R529	J10
C507	F9	R530	I11
C508	F8	R531	I10
C509	F8	R532	I10
C510	F8	R533	F7
C511	G8	R534	I9
C512	E7	R535	I9
C513	E7	R536	H10
C514	E7	R537	H10
C515	E7	R538	H9
C516	G7	R539	H9
C517	G7	R540	E4
C518	E7	R541	D4
C519	E7	R542	E7
C520	H6	R543	D4
C521	H4	R544	E5
C522	F4	R545	D4
C524	I6	R546	F6
C525	K4	R547	D4
C526	K5	R548	K7
C527	K6	R549	E4
C528	K7	R550	E4
C529	K7	R551	D4
C531	K7	R552	E4
C532	K8	R553	E4
C533	L7	R557	D3
C534	L8	R558	D3
C535	G4	R559	C3
C536	D7	R580	F3
C537	I9	R581	F3
C538	I9	R582	F3
C539	I9	R583	G3
C540	I9	R584	F3
C541	I10	R585	E3
C542	I10	R586	E3
C543	I10	X501	K8
C544	I10		
C545	I10		
C546	I10		
C547	I11		
C548	I11		
C549	H9		
C550	H9		
C551	H9		
C552	E7		
C553	C6		
C554	C3		
C555	D7		
C556	K3		
C557	H4		
C558	D6		
C559	G6		
C560	H3		
C561	H3		
C562	D4		
C563	L4		
C564	E9		
C565	K6		
C581	F3		
CE	L10		
CE	I3		
CL	L10		
CL	I3		
D501	D8		
DI	L10		
DI	I3		
DO	L10		
DO	I3		
DRF	L11		
DRF	J3		
FSEQ	L11		
FSEQ	J3		
IC501	I8		
IC502	D5		
IC503	G5		
L501	G5		
L502	J7		
PN501	B10		
PN502	B3		
PN503	B6		
PN504	E2		
PN505	N11		
PN506	G11		
PN507	J2		
PN508	L2		
Q501	D9		
Q503	I5		
Q504	J4		
Q505	J5		
R501	B10		
R502	B10		
R503	B10		
R504	B10		
R505	B10		
R506	B10		
R507	B8		
R508	D9		
R509	F9		
R510	F9		
R511	F9		
R512	F9		
R513	F6		
R515	N11		
R516	I4		
R517	I4		
R518	J4		
R519	J5		

WIRING DIAGRAM

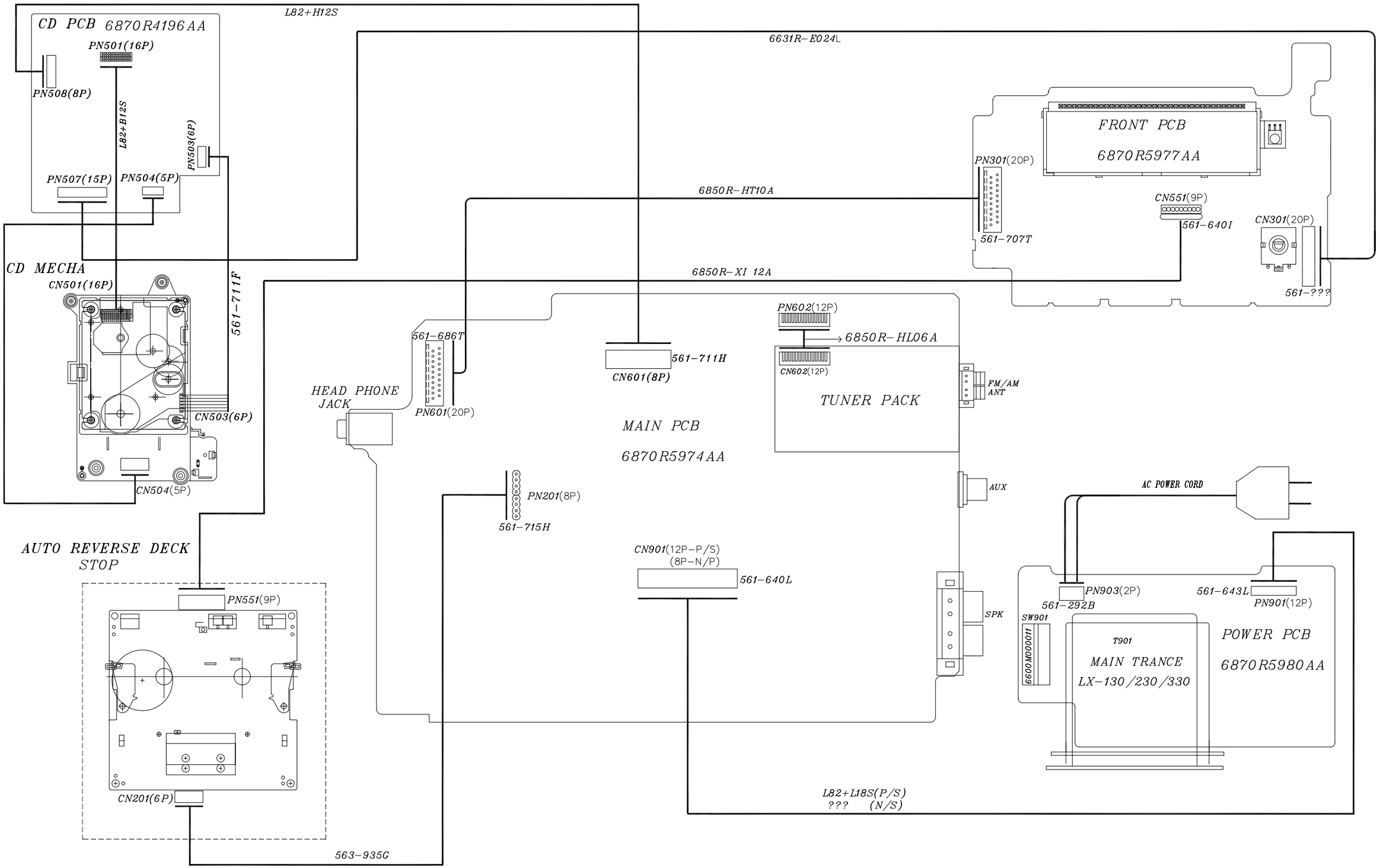

PRINTED CIRCUIT DIAGRAMS

• MAIN/TUNER P.C. BOARD(SOLDER SIDE)

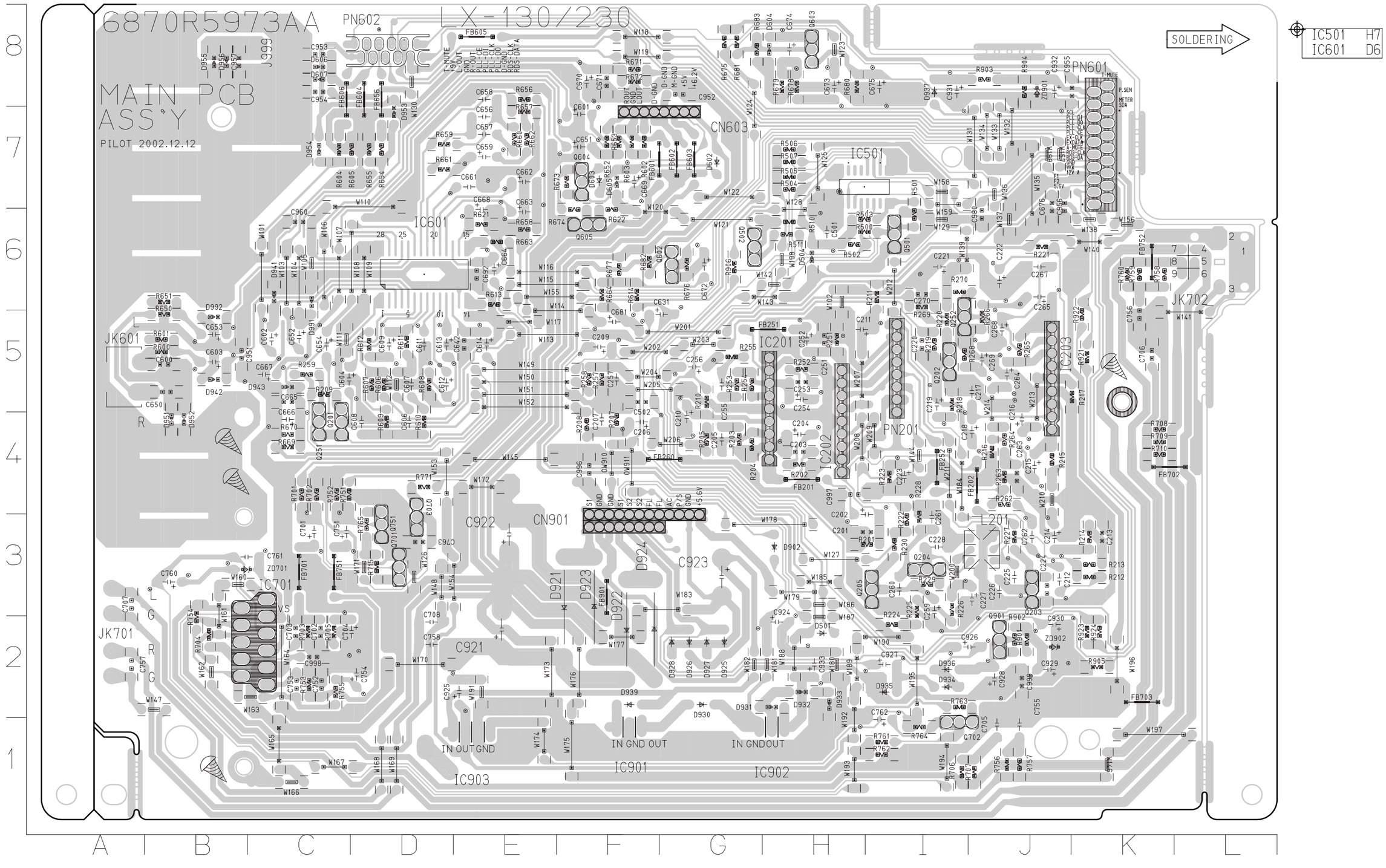

• MAIN/TUNER P.C. BOARD(COMPONENT SIDE)

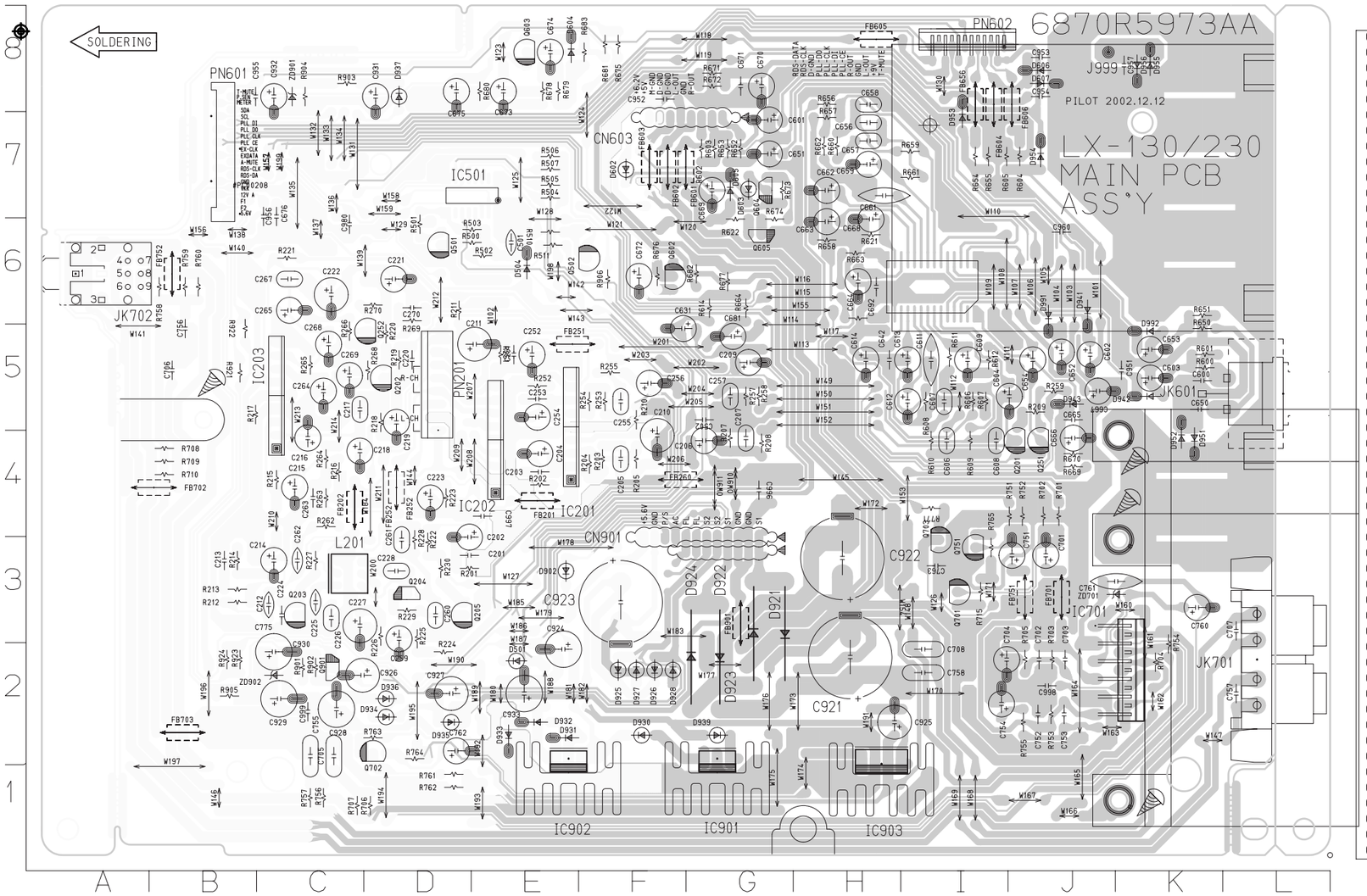

C201	D3	C607	I5	C761	K3	D935	D2	Q204	D3	R263	C4	R673	G7
C202	D3	C608	I4	C762	D1	D936	D2	Q205	D3	R264	C4	R674	G6
C203	E4	C609	I5	C763	I3	D937	D8	Q251	J4	R265	C5	R675	F8
C204	E4	C611	I5	C921	H2	D939	G2	Q252	D5	R266	C5	R676	F6
C205	F4	C612	I5	C922	H3	D941	J6	Q501	D6	R268	D5	R677	G6
C206	G4	C613	I5	C923	F3	D942	K5	Q502	F6	R269	D6	R678	E8
C207	G4	C614	H5	C924	E2	D943	J5	Q602	F6	R270	D6	R679	E8
C209	G5	C631	F5	C925	H2	D951	K4	Q603	E8	R500	E6	R680	E8
C210	F4	C642	H5	C926	C2	D952	K4	Q604	G7	R501	D6	R681	F8
C211	E5	C650	K5	C927	D2	D953	I7	Q605	G6	R502	E6	R682	G6
C212	C3	C651	G7	C928	C2	D954	J7	Q701	I3	R503	E6	R683	F8
C213	B3	C652	J5	C929	C2	D955	K8	Q702	D1	R504	E7	R701	J4
C214	C3	C653	K5	C930	C2	D956	K8	Q703	I3	R505	E7	R702	J4
C215	C4	C654	J5	C931	D8	D991	J6	Q751	I3	R506	E7	R703	J2
C216	C4	C656	H7	C932	C8	D992	K5	Q901	C2	R507	E7	R704	K2
C217	C5	C657	H7	C933	E2	FB201	E4	R201	D3	R510	E6	R705	J2
C218	C4	C658	H8	C951	K5	FB202	C4	R202	E4	R511	E6	R706	D1
C219	D5	C659	H7	C952	F8	FB251	E5	R203	F4	R600	K5	R707	C1
C220	D5	C661	H7	C953	J8	FB252	D4	R204	F4	R601	K5	R708	B4
C221	D6	C662	H7	C954	J8	FB260	F4	R205	F4	R602	G7	R709	B4
C222	C6	C663	H6	C955	B8	FB601	F7	R207	G4	R603	G7	R710	B4
C223	D4	C664	H6	C956	C7	FB602	F7	R208	G4	R604	J7	R715	I3
C224	C3	C665	J5	C957	K8	FB603	F7	R209	J5	R605	I7	R751	J4
C225	C3	C666	J4	C960	J6	FB604	I8	R210	F5	R606	I5	R752	J4
C226	C3	C667	J5	C980	C6	FB605	H8	R211	D6	R607	I5	R753	J2
C227	C3	C668	H6	C996	G4	FB606	J8	R212	B3	R608	I5	R754	K2
C228	D3	C669	G7	C997	E4	FB656	I8	R213	B3	R609	I4	R755	J2
C251	E5	C670	G8	C998	J2	FB701	J3	R214	B3	R610	I4	R756	C1
C252	E5	C671	G8	C999	C2	FB702	B4	R215	C4	R611	I5	R757	C1
C253	E5	C672	F6	CN603	F7	FB703	B2	R216	C4	R612	I5	R758	B6
C254	E5	C673	E8	CN901	G3	FB751	J3	R217	B5	R613	H6	R759	B6
C255	F5	C674	E8	D501	E2	FB752	B6	R218	D5	R614	G6	R760	B6
C256	F5	C675	D8	D504	E6	FB901	G3	R219	D5	R621	H6	R761	D1
C257	G5	C676	C7	D602	F7	IC201	E4	R220	D5	R622	G6	R762	D1
C259	D3	C681	G5	D603	G7	IC202	E4	R221	C6	R650	K5	R763	D2
C260	D3	C692	H6	D604	E8	IC203	C4	R222	D3	R651	K6	R764	D1
C261	D3	C701	J3	D605	G7	IC701	J3	R223	D4	R652	G7	R765	I3
C262	C3	C702	J2	D606	J8	IC901	G1	R224	D2	R653	G7	R771	I4
C263	C4	C703	J2	D607	J8	IC902	E1	R225	D3	R654	I7	R901	C2
C264	C5	C704	I2	D902	E3	IC903	H1	R226	D3	R655	I7	R902	C2
C265	C6	C705	C1	D921	G3	J999	J8	R227	C3	R656	H8	R903	C8
C267	C6	C706	B5	D922	G2	JK601	L5	R228	D3	R657	H7	R904	C8
C268	C5	C707	L3	D923	G3	JK701	L2	R229	D3	R658	H6	R905	B2
C269	C5	C708	I2	D924	G2	JK702	A6	R230	D3	R659	I7	R906	F6
C270	D6	C751	J3	D925	F2	L201	C3	R251	E5	R660	H7	R921	B5
C501	E6	C752	J2	D926	F2	OW910	G4	R252	E5	R661	I7	R922	B5
C502	G5	C753	J2	D927	F2	OW911	G4	R253	F5	R662	H7	R923	B2
C600	K5	C754	I2	D928	F2	PN201	D4	R254	F5	R663	H6	R924	B2
C601	G7	C755	C1	D930	F2	PN601	B7	R255	F5	R664	G6	ZD701	K3
C602	J5	C756	B5	D931	E2	PN602	I8	R257	G5	R669	J4	ZD901	C8
C603	K5	C757	L2	D932	E2	Q201	J4	R258	G5	R670	J4	ZD902	C2
C604	J5	C758	I2	D933	E2	Q202	D5	R259	J5	R671	G8		
C606	I4	C760	K3	D934	D2	Q203	C3	R262	C4	R672	G8		

• FRONT/POWER P.C. BOARD (COMPONENT SIDE)

NOTE: Warning
⚠ Parts that are shaded are critical With respect to risk of fire or electrical shock.

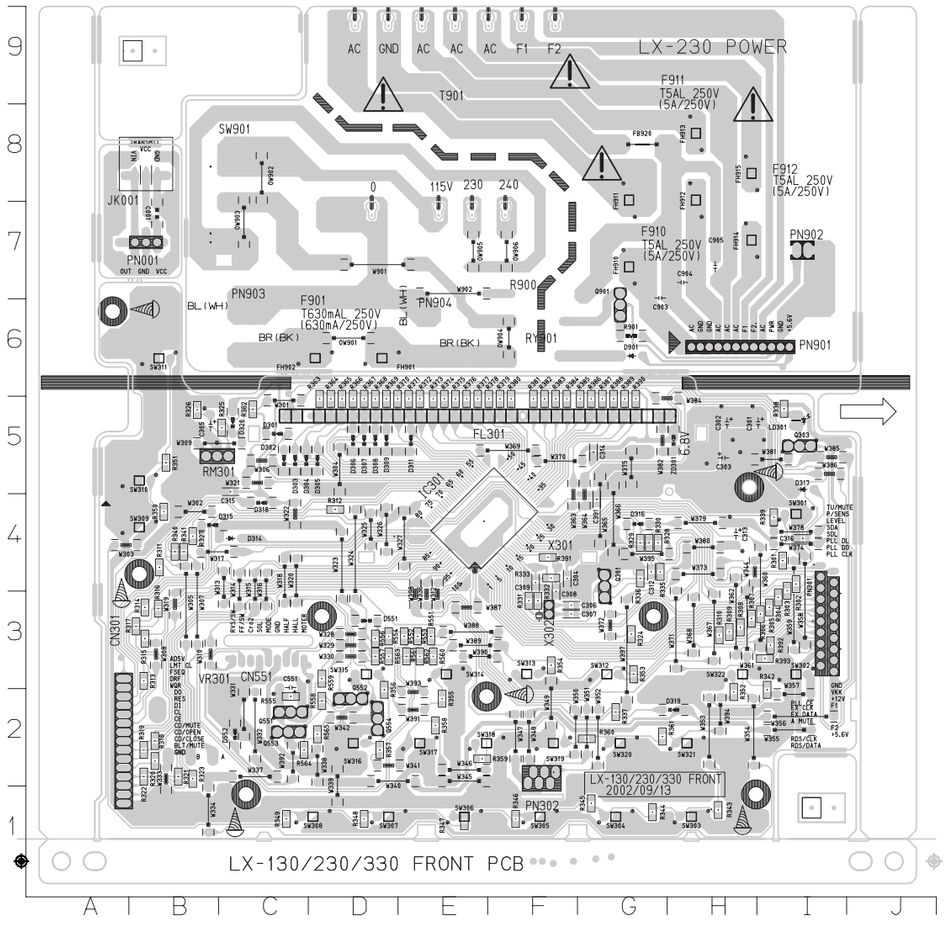

C304	F4	R350	B4
C306	F3	R351	B5
C307	F3	R352	H2
C308	F3	R353	G3
C309	F4	R354	F3
C312	G4	R355	E2
C314	G5	R356	D2
C315	C5	R357	D2
C316	I4	R358	E2
C391	G4	R359	E2
IC301	E4	R360	G2
R301	I4	R361	G2
R302	I4	R362	C5
R303	I3	R363	D5
R304	I3	R364	D5
R305	I3	R365	D5
R306	I3	R366	D5
R307	H3	R367	D5
R308	H3	R368	D5
R309	H3	R369	D5
R310	H3	R370	D5
R311	B4	R371	E5
R312	D4	R372	E5
R313	B3	R373	E5
R314	B3	R374	E5
R315	B3	R375	E5
R316	B3	R376	E5
R317	B3	R377	E5
R318	B2	R378	F5
R319	B2	R379	F5
R320	B2	R380	F5
R321	B2	R381	F5
R322	B2	R382	F5
R323	B2	R383	F5
R324	G3	R384	F5
R325	C5	R385	G5
R326	B5	R386	G5
R327	B4	R387	G5
R328	G4	R388	G5
R329	G4	R389	G5
R330	G4	R390	G5
R331	F3	R391	F4
R332	F3	R392	I3
R333	F4	R393	I3
R335	G4	R551	E3
R336	G4	R552	E3
R337	G2	R553	E3
R338	I5	R554	D3
R339	I4	R555	C2
R340	B4	R556	D3
R341	B4	R557	D3
R342	I2	R558	D2
R343	H1	R559	D3
R344	G1	R560	E3
R345	G1	R561	E3
R346	F1	R562	E3
R347	E1	R563	D3
R348	D1	R564	C2
R349	C1	R565	D2

• FRONT/POWER P.C. BOARD (SOLDER SIDE)

NOTE: Warning
⚠ Parts that are shaded are critical With respect to risk of fire or electrical shock.

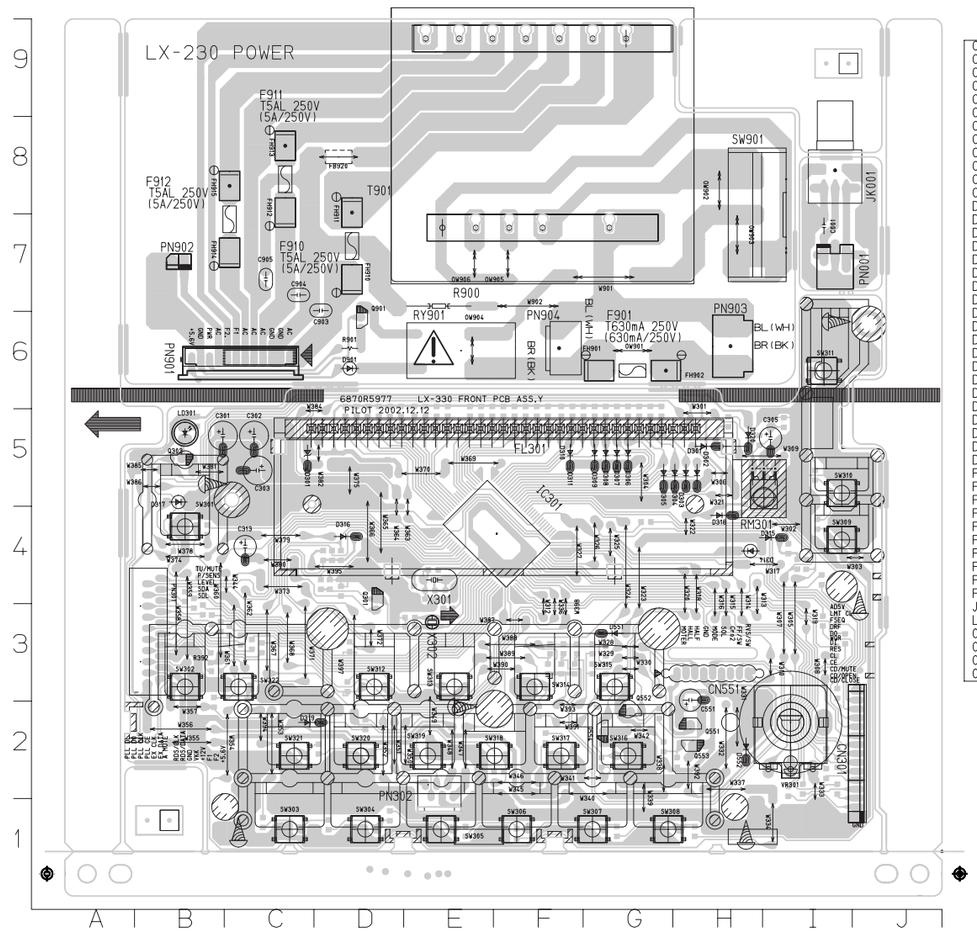

C001	I7	OW905	F7
C301	B5	OW906	E7
C302	C5	PN001	I7
C303	C5	PN301	B4
C305	I5	PN302	E2
C313	C4	PN901	B6
C551	H3	PN902	B7
C903	D7	PN903	H6
C904	C7	PN904	F6
C905	C7	Q301	D4
CN301	J1	Q303	B5
CN551	H3	Q551	H2
D301	H5	Q552	G2
D302	H5	Q553	H2
D303	H5	Q554	G2
D304	H5	Q901	D6
D305	G5	R900	E7
D306	G5	R901	D6
D307	G5	RM301	I5
D308	G5	RY901	E6
D309	G5	SW301	B4
D311	F5	SW302	B3
D314	H4	SW303	C1
D315	I4	SW304	D1
D316	D4	SW305	E1
D317	B5	SW306	F1
D318	H4	SW307	G1
D319	C2	SW308	G1
D320	H5	SW309	I4
D551	G3	SW310	I5
D552	H2	SW311	I6
D901	D6	SW312	D3
FB920	D8	SW313	E3
FH901	G6	SW314	F3
FH902	G6	SW315	G3
FH910	D7	SW316	G2
FH911	D8	SW317	F2
FH912	C8	SW318	F2
FH913	C8	SW319	E2
FH914	C7	SW320	D2
FH915	C8	SW321	C2
FL301	H5	SW322	C3
JK001	I8	SW901	H7
LD301	B5	T901	G7
OW901	G6	VR301	I2
OW902	H8	X301	E4
OW903	H7	X302	E3
OW904	E6	ZD301	C5

• CD MAIN P.C. BOARD (SOLDER SIDE)

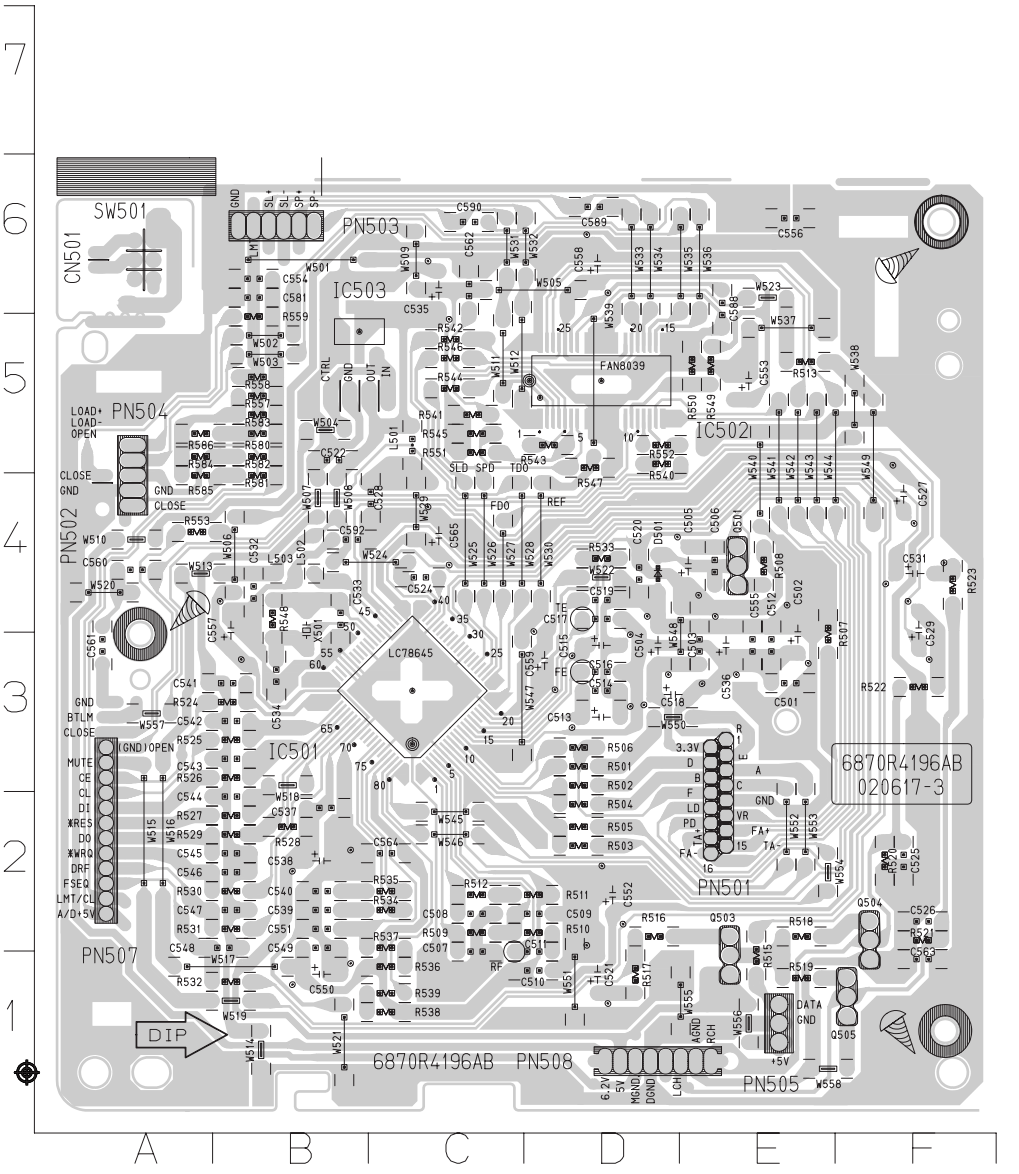

• CD MAIN P.C. BOARD (COMPONENT SIDE)

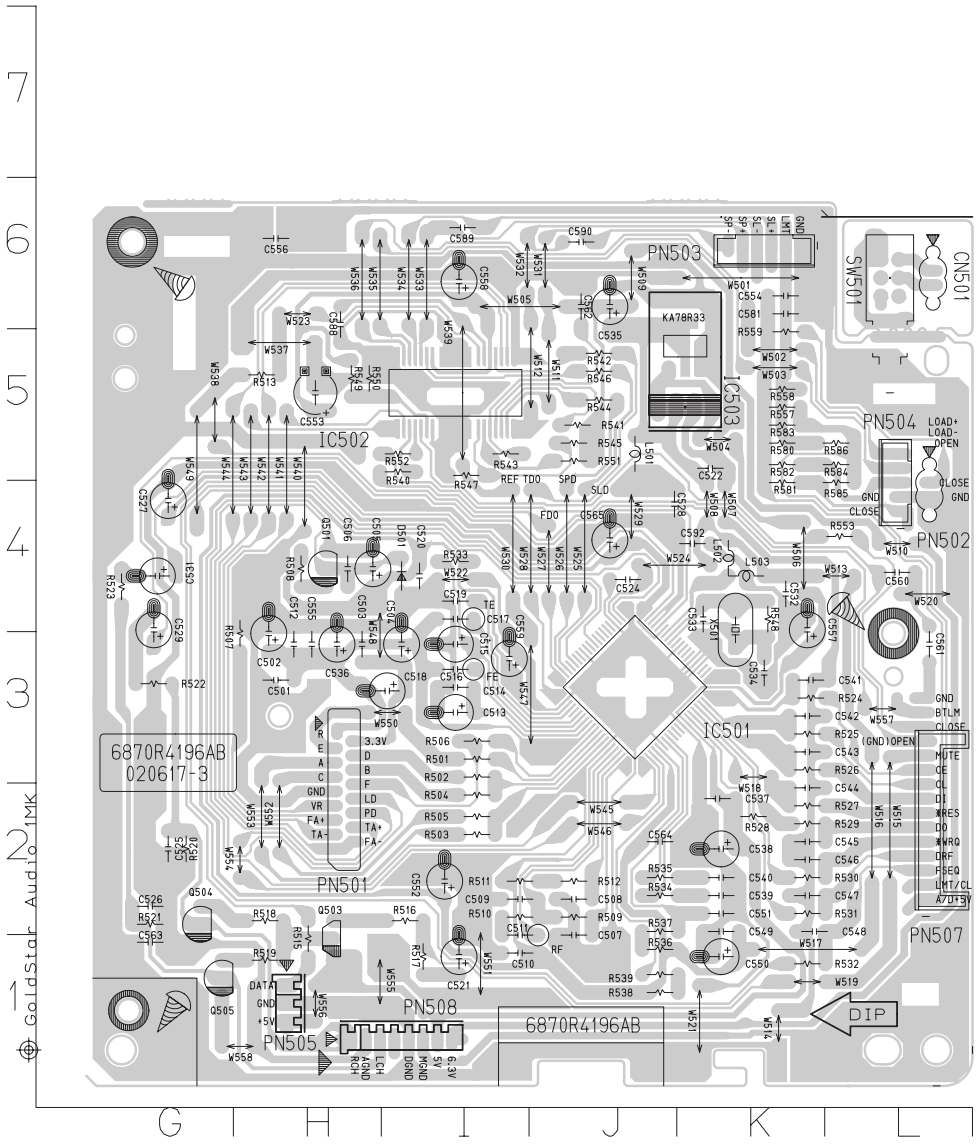

C501	H3	PN502	L4
C502	H3	PN503	K6
C503	H3	PN504	L4
C504	I3	PN505	H1
C505	H4	PN507	L2
C506	H4	PN508	H1
C507	J1	Q501	H4
C508	J2	Q503	H1
C509	I2	Q504	G2
C510	I1	Q505	G1
C511	I1	R501	I3
C512	H3	R502	I3
C513	I3	R503	I2
C514	I3	R504	I2
C515	I3	R505	I2
C516	I3	R506	I3
C517	I4	R507	H3
C518	I3	R508	H4
C519	I4	R509	J2
C520	I4	R510	I2
C521	I1	R511	I2
C522	K5	R512	J2
C524	J4	R513	H5
C525	G2	R515	H1
C526	G2	R516	I2
C527	G4	R517	I1
C528	J4	R518	H2
C529	G4	R519	H1
C531	G4	R520	G2
C532	K4	R521	G2
C533	K4	R522	G3
C534	K3	R523	G4
C535	J6	R524	K3
C536	H3	R525	K3
C537	K2	R526	K3
C538	K2	R527	K2
C539	K2	R528	K2
C540	K2	R529	K2
C541	K3	R530	K2
C542	K3	R531	K2
C543	K3	R532	K1
C544	K2	R533	I4
C545	K2	R534	J2
C546	K2	R535	J2
C547	K2	R536	J1
C548	K2	R537	J2
C549	K2	R538	J1
C550	K1	R539	J1
C551	K2	R540	I5
C552	I2	R541	J5
C553	H5	R542	J5
C554	K6	R543	I5
C555	H3	R544	J5
C556	H6	R545	J5
C557	K4	R546	J5
C558	I6	R547	I5
C559	I3	R548	K4
C560	L4	R549	H5
C561	L3	R550	H5
C562	J6	R551	J5
C563	G1	R552	I5
C564	J2	R553	L4
C565	J4	R557	K5
C581	K6	R558	K5
C588	H6	R559	K5
C589	I6	R580	K5
C590	J6	R581	K4
C592	K4	R582	K5
D501	I4	R583	K5
IC503	K5	R584	L5
L501	J5	R585	L4
L502	K4	R586	L5
L503	K4	X501	K4
PN501	H3		

❏ INTERNAL BLOCK DIAGRAM OF ICs

■ KIA6225P/S (IC201)

BIPOLAR LINEAR INTEGRATED CIRCUIT

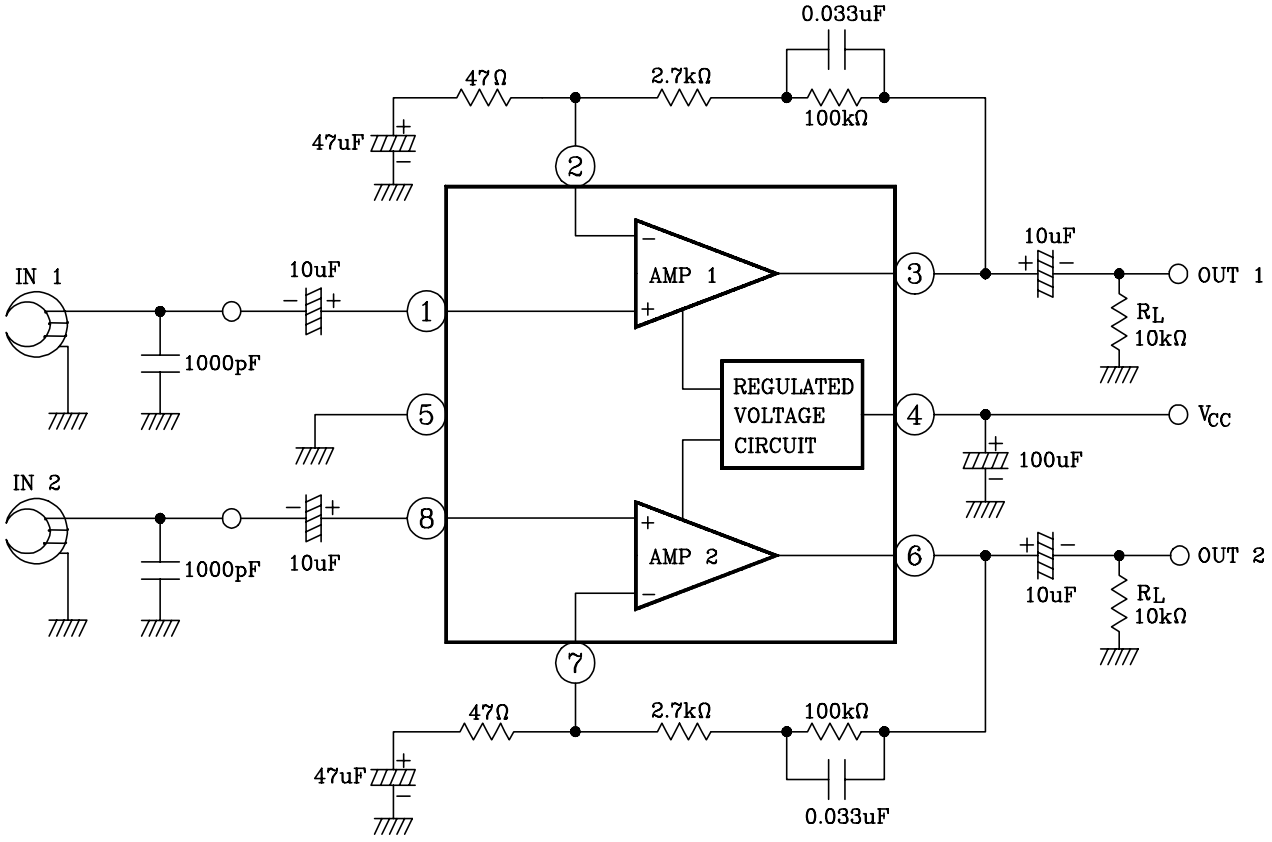

■ BA3126N (IC202)

2-channel head switch for radio cassette recoreders

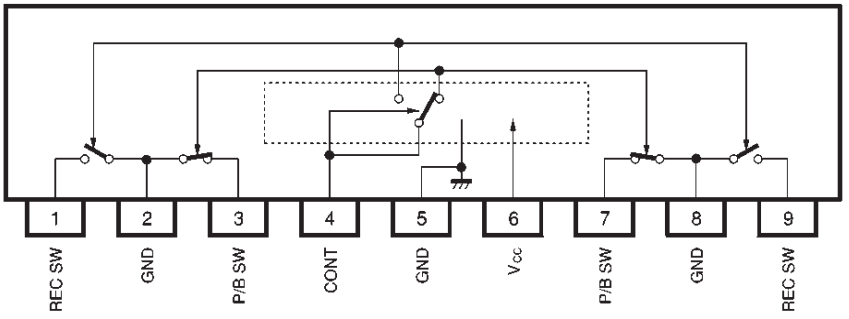

• **Internal circuit configuration**

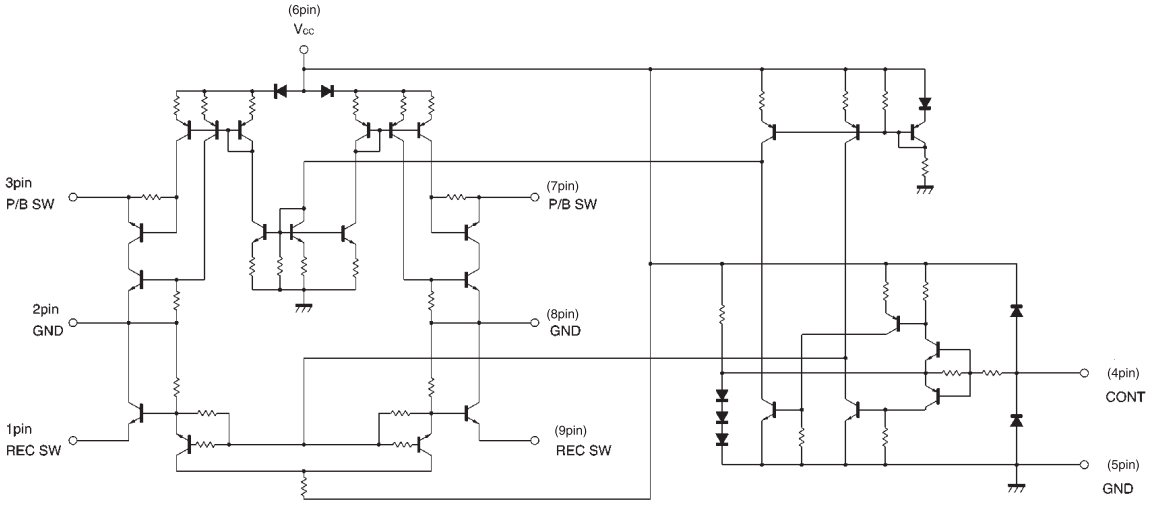

■ BA3308 (IC203)

Dual preamplifier with ALC

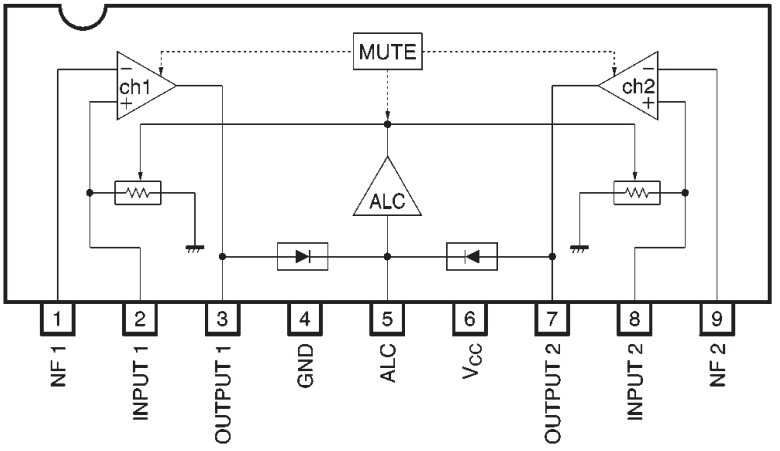

■ LC78645E (IC501)

Digital Servo Block Diagrams

• Overview

The focus servo circuit performs analog/digital conversion on FE(the focus error signal), while the tracking and sled servo circuits do so on TE(the tracking error signal), then they each pass that result through an equalizer, perform digital/analog conversion, and output it, At the spindle servo, based on the EFM signal during CLV control or the FG signal during CAV control, the calculated value passes through an equalizer, undergoes digital/analog conversion, and is output.

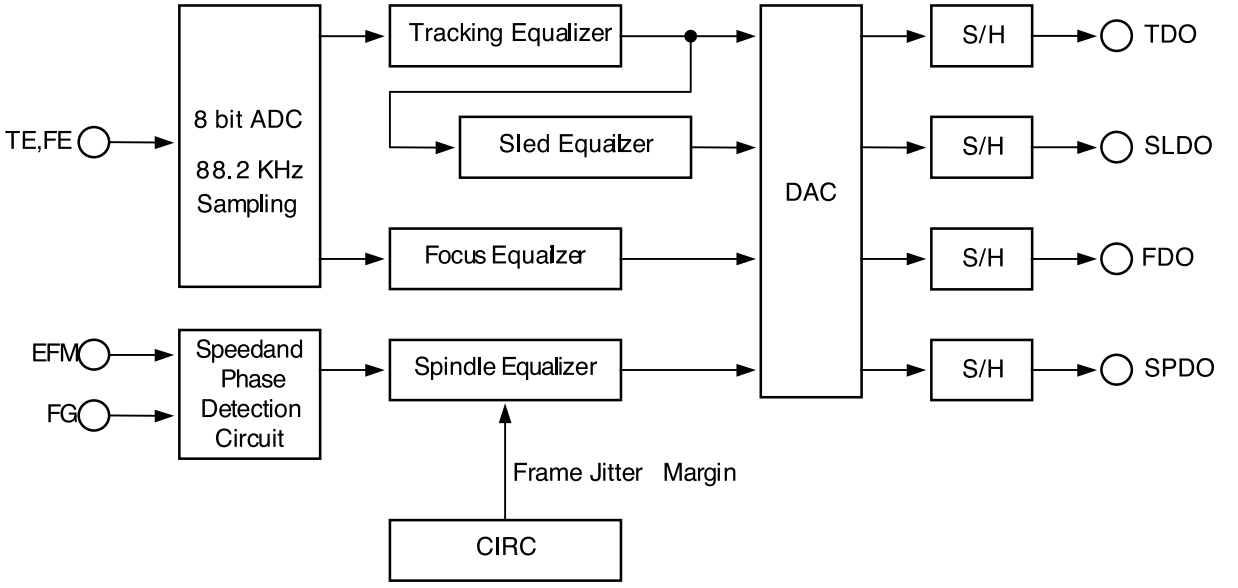

■ BU2090F (IC501)

-12 -bit, Serial IN, parallel OUT driver

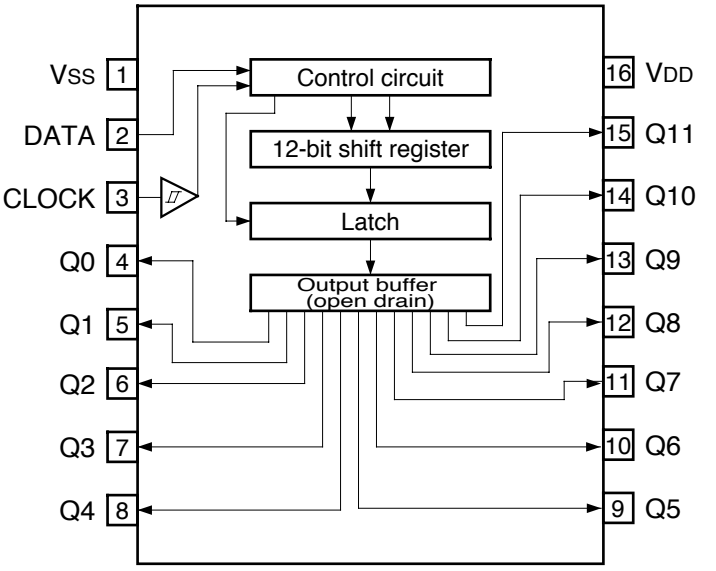

■ FAN8039BD3 (IC502)

5-CH Motor Driver

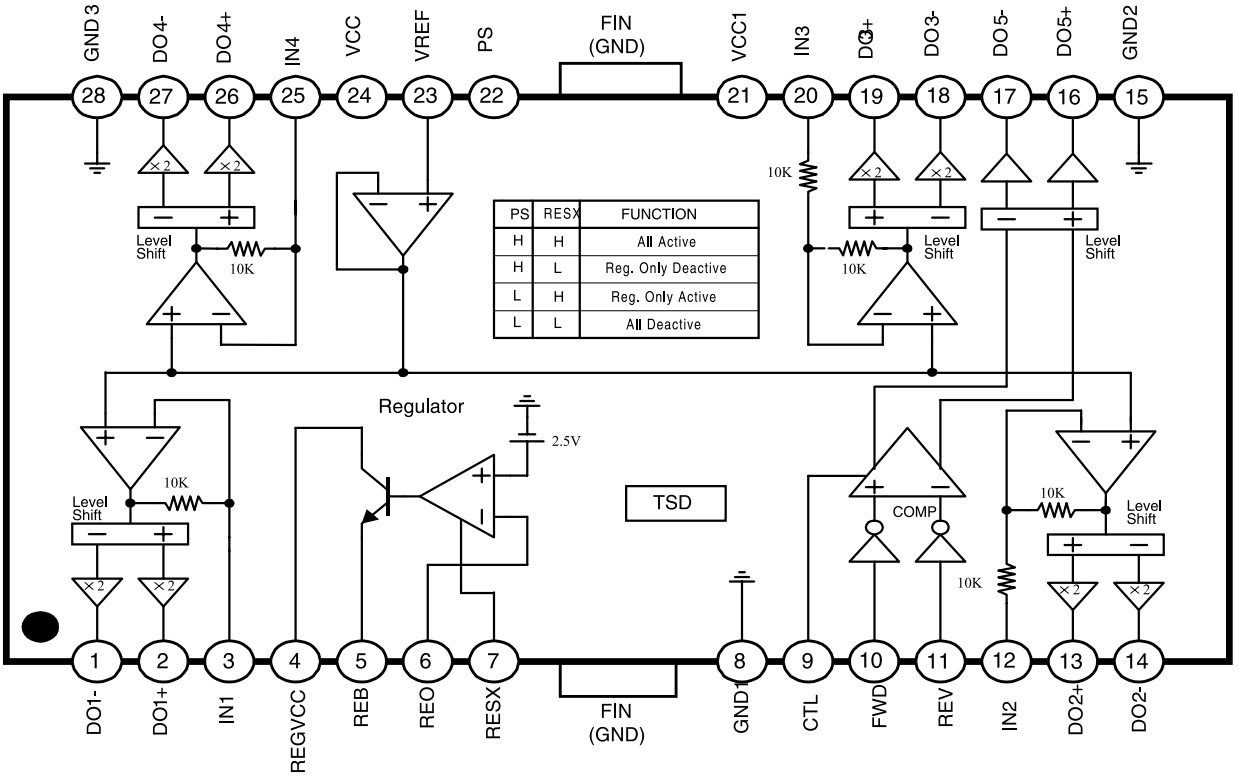

• PIN Definitions

NO	Symbol	Description	NO	Symbol	Description
1	DO1-	CH1 Drive Output (-)	15	GND2	Power Ground1 (CH 2,3,5)
2	DO1+	CH1 Drive Output (+)	16	DO5+	CH5 Drive Output (+)
3	IN1	CH1 Drive Input	17	DO5-	CH5 Drive Output(-)
4	REGVCC	Regulator Supply Voltage	18	DO3-	CH3 Drive Output(-)
5	REB	Regulator Output	19	DO3+	CH3 Drive Output (+)
6	REO	Regulator Feedback Input	20	IN3	CH3 Drive Input
7	RESX	Regulator Reset	21	VCC1	Supply Voltage1(CH2,CH3,CH5)
8	GND1	Signal Ground	22	PS	Power Save
9	CTL	CH5 Motor Speed Control	23	VREF	Bias Voltage
10	FWD	CH5 Forward Input	24	VCC	Supply Voltage(CH1,CH4)
11	REV	CH5 Reverse Input	25	IN4	CH4 Drive Input
12	IN2	CH2 Drive Input	26	DO4+	CH4 Drive Output (+)
13	DO2+	CH2 Drive Output (+)	27	DO4-	CH4 Drive Output (-)
14	DO2-	CH2 Drive Output (-)	28	GND3	Power Ground2 (CH 1,4)

■ TDA7265 (LX-230 IC701)

25 +25W STEREO AMPLIFIER WITH MUTE & ST-BY

• DESCRIPTION

The TDA7265 is class AB dual Audio power am-plifier assembled in the Multiwatt package, spe-cially designed for high quality sound application as Hi-Fi music centers and stereo TV sets.

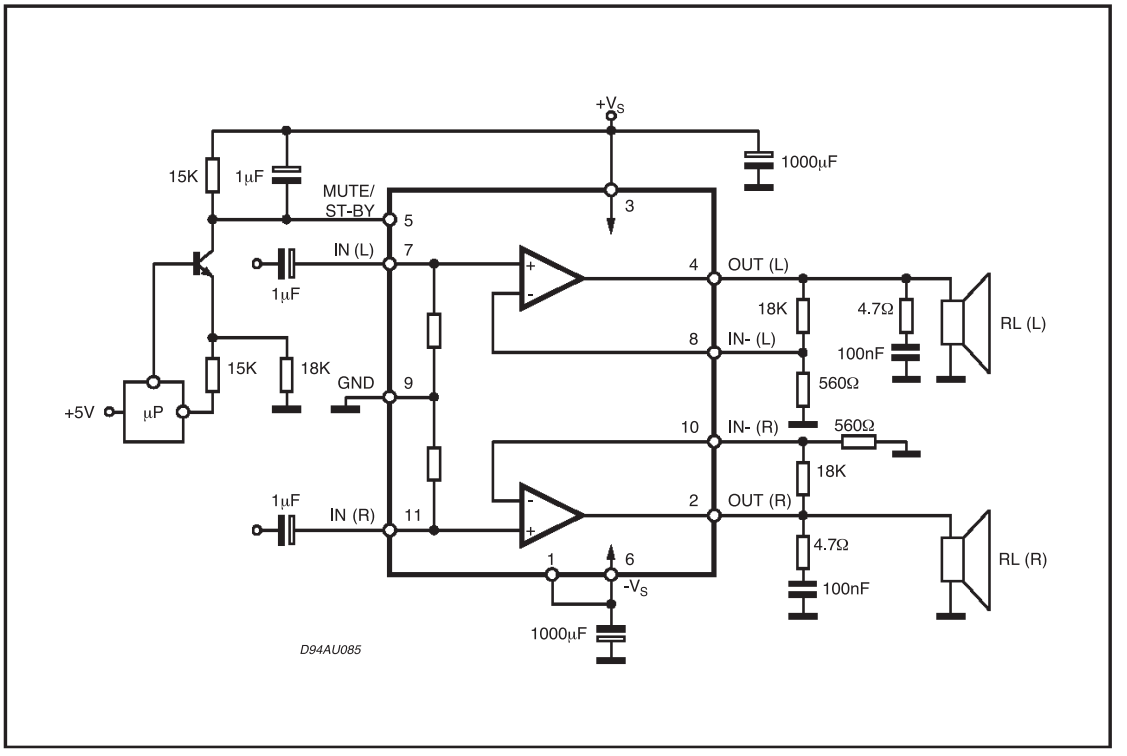

• PIN CONNECTION (Top view)

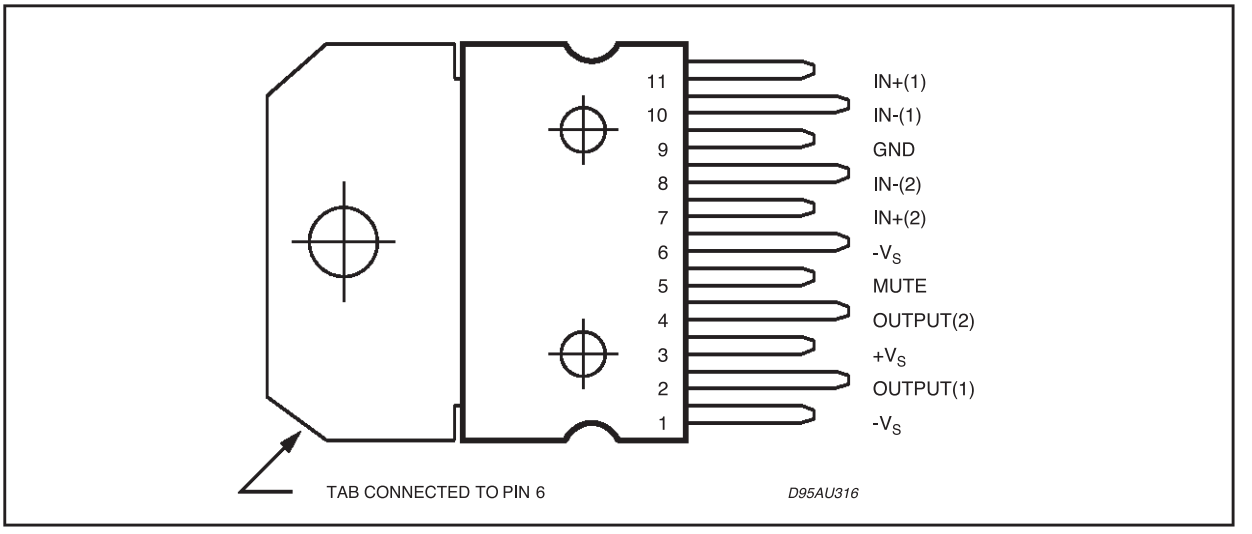

MEMO

SECTION 3. EXPLODED VIEWS

• CABINET AND MAIN FRAME SECTION

NOTE) Refer to "SECTION 5 REPLACEMENT PARTS LIST" in order to look for the part number of each part.

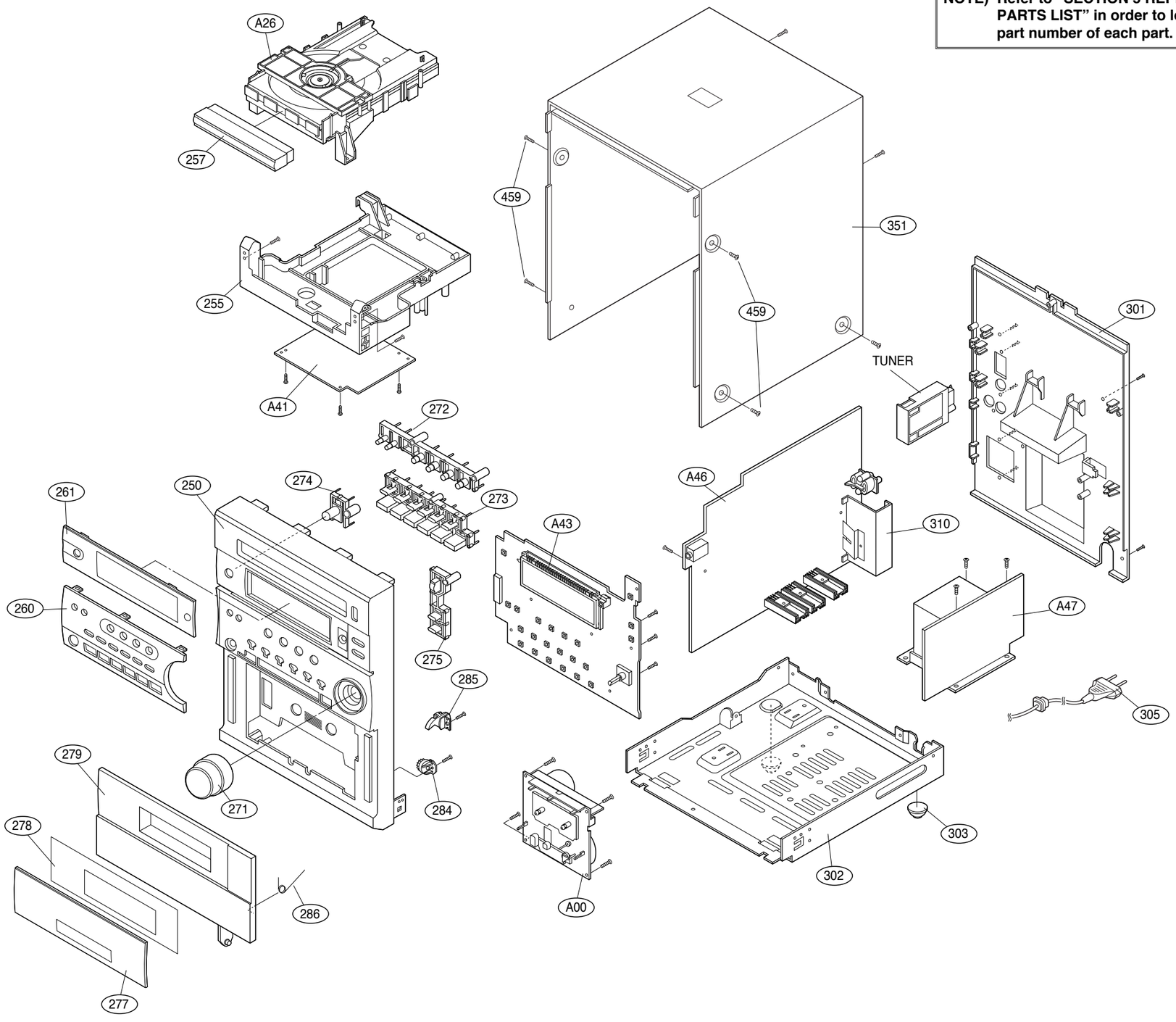

• CD MECHANISM

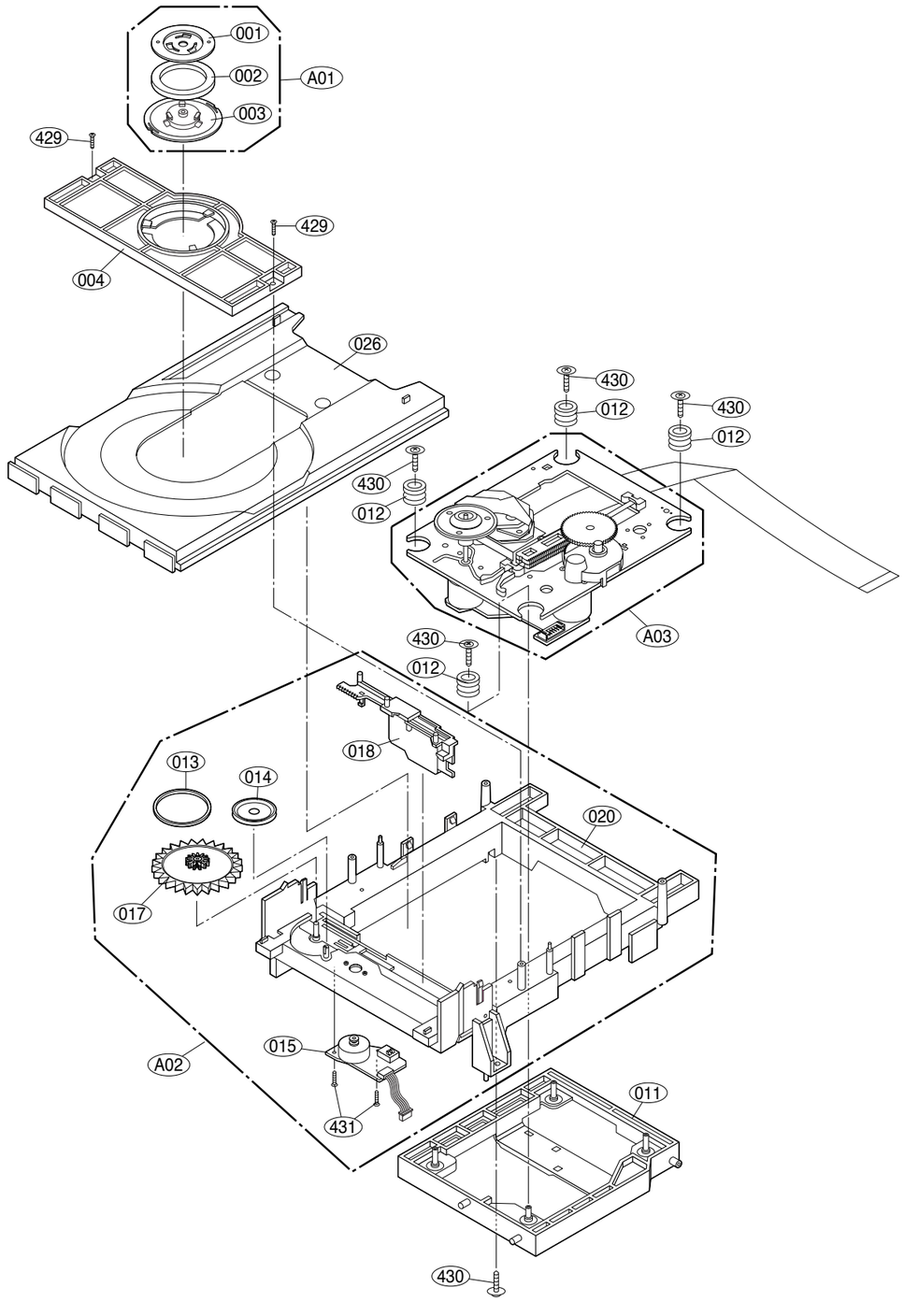

LOCA.NO.	PART NO	DESCRIPTION	SPECIFICATION
A00	6721RJ0323A	DECK ASSEMBLY,AUDIO	CDP(CDM-300) CKD-HZ
A01	4861RH0004A	CLAMP ASSEMBLY	DISC (CDM-300)
A02	4405RHD009A	MECHANISM ASSEMBLY	MAIN LOADING CDP (CDM-300)
A03	6717RCA001A	PICK UP ASSY	KSM-213VSCM SONY FRONT LOADING
001	3300R-0547B	PLATE	CLAMP (CDM-300)
002	524-012AAAA	COVER	CLAMP MAGNET (030X018X5T)
003	4860R-0016A	CLAMP	DISC (CDM-300)
004	4930R-0171A	HOLDER	CLAMP
011	3040R-0073A	BASE	P/U (CDM-300)
012	5040R-0073A	RUBBER	DAMPER CDM-300(BK)
013	4400R-0006A	BELT	LOADING
014	4470R-0055A	GEAR	PULLEY
015	6871RC2016A	PWB(PCB) ASSEMBLY,CD	LOADING (CDM-300)
017	4470R-0056A	GEAR	LOADING
018	4974R-0023A	GUIDE	UP/DOWN
020	3040R-0072A	BASE	MAIN (CDM-300)
026	3390R-0005A	TRAY	DISC
429	1SZZR-0012A	SCREW,	B-TITE
430	6756SBX001A	CD MECHANISM PARTS	SCREW 2.6X10X10XFZMY CDM-H813
431	1SZZH-1007B	SCREW,DRAWING	+ D2.0 6MM SWRCH16A/ZNBK 4MM 1

SECTION 4. SPEAKER SECTION

MODEL: LXS-230

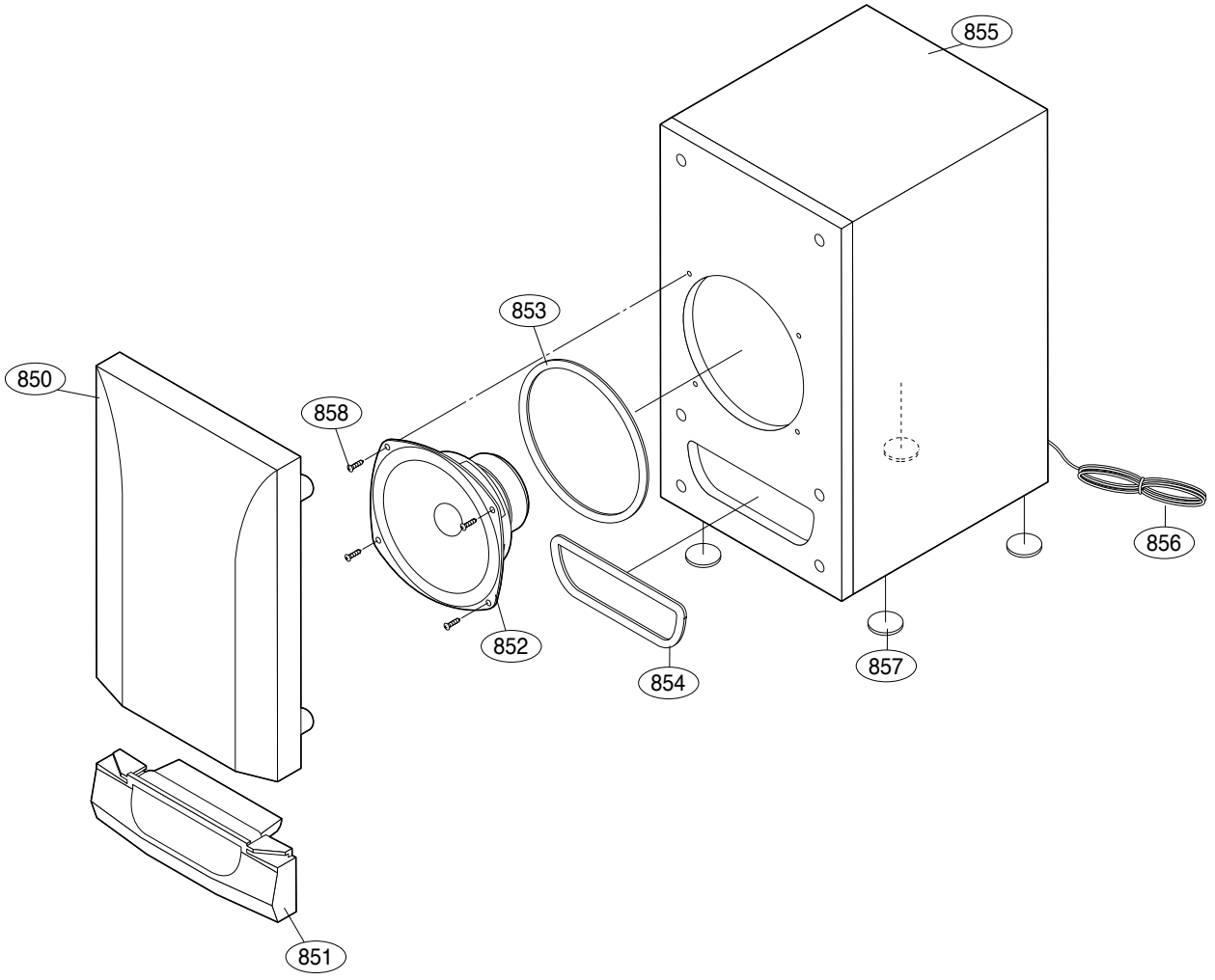

LXS-230 **RUN DATE : 26.MARCH.2003**

LOCA.NO.	PART NO.	DESCRIPTON	SPECIFICATION	REMARKS
850	3701RM0039A	NET ASSEMBLY	LXS-230, NET ASSY	
851	3720RMF043A	PANEL,FRONT	FRONT LX-230, RESIN:L.GRAY, SP	
852	6400SCSG03A	SPEAKER,FULLRANGE	CW-125B30L SAMMI 6-0 OHM 30 W	
853	4766RM0012A	FELT	FE-196E BLACK WOOFER	
854	4766RM0029A	FELT	1.0T BLACK LXS-230, FOR DUCT	
855	3091RMW048A	CABINET ASSEMBLY	LXS-230, CABINET ASSY”	
856	6852SCK004A	CORD,A/V	FE-M100E , 0.16 * 18/2C (CORD	
857	3610RM0009A	FOOT	LXS-330, EVA(BLACK) PHI15X1T	
858	353M050C	SCREW	BH 3.5X16 FBK	

MEMO